KONTI HIDROPLAST®

PRODUCTION OF POLYETHYLENE
AND POLYPROPYLENE PIPES

POLYPROPYLENE SEWAGE PIPES

KONTI KAN PP-HM

www.kontihidroplast-al.com

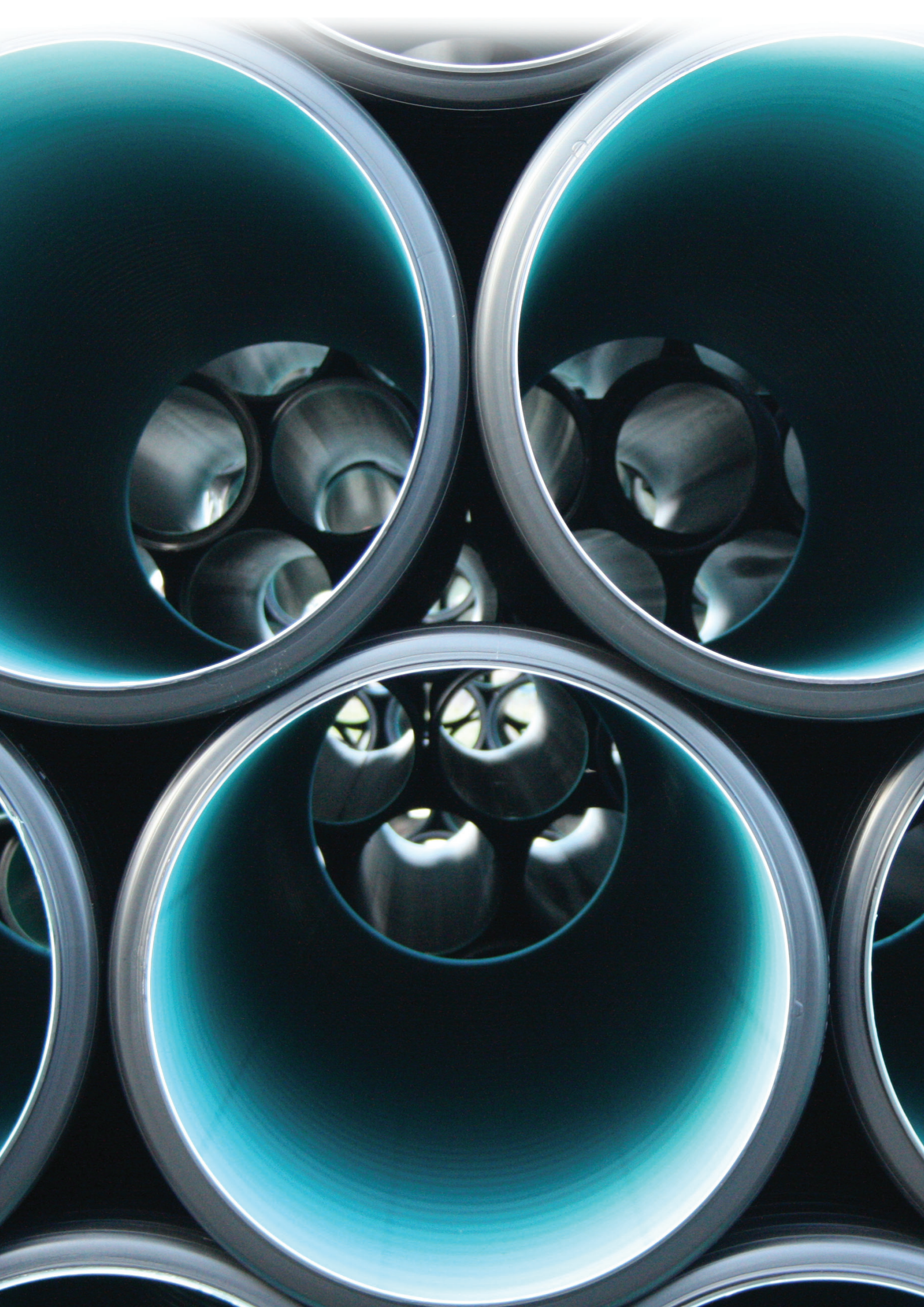

CONTENTS

INTRODUCTION 2

PRODUCT DESCRIPTION 5

PIPE PROFILE AND DIMENSIONS 7

SOLID CONNECT 9

RING FLEXIBILITY 10

WATER TIGHTNESS 10

HYDRAULIC BEHAVIOUR 10

FLOW RATE TABLE, PIPE FILLING 90% 11

QUALITY GUARANTEE 12

STANDARDS 12

TRANSPORT, UNLOADING AND STORAGE 13

ASSEMBLING KONTI KAN PP-HM PIPES WITH PVC/PP/PE CONNECTION PART 13

CONNECTION OF KONTI KAN PP-HM PIPES 14

KONTI KAN PP-HM INJECTION FITTINGS 17

CERTIFICATES 28

LABORATORY TESTING 29

KONTI HIDROPLAST®

WELCOME TO OUR WORLD

Konti Hidroplast is part of the world's largest manufacturer and supplier of high performance plastic pipes and offers the best and the most cost effective pipe systems for its customers.

Konti Hidroplast specialises in polyethylene pipe systems for gas and water transportation in the utilities and industrial markets.

MARKET ORIENTED

Konti Hidroplast products find a broad range of applications in the industrial and utilities market on a worldwide scale.

The water and gas distribution enterprises are important sectors for high integrity products where the maintenance of water quality and the safe transport of gaseous fuels are of paramount importance.

Industrial applications include alternative energy installations in landfill gas systems to effluent transportation and mineral slurry.

Products are widely used in pipeline installation, repair and maintenance.

Many of the brands in the Konti Hidroplast portfolio have a long record of innovation in meeting the needs of the water and gas utilities.

Being one of the foremost pioneers in polyethylene pipe systems, Konti Hidroplast is continually improving and updating its offer to meet the ever growing needs of the distribution engineer, ensuring they stay at the forefront of world gas and water distribution/treatment systems.

CUSTOMER FOCUS

The key to our success lies in the commitment to provide the highest quality service and support. We are a team of highly motivated and experienced individuals.

We place the utmost importance on meeting the needs of our customers, constantly evolving our extensive product portfolio to meet the ever changing demands of the water and gas utilities, industrial and foreign markets.

QUALITY

Konti Hidroplast is a result-driven busines – its people, products and service. Designed, manufactured and supplied under EN ISO 9001:2000 accredited Quality Management Systems, Konti Hidroplast products comply with relevant national, European and international product standards to ensure complete reliability for our customers.

Besides the ISO certificates for Quality Management Systems and ecology, the gas pipes are also certified by DVGW CERT GmbH.

THE ENVIRONMENT

Committed to sustainable manufacture and systems, Konti Hidroplast operates and maintains an environmental policy fully accredited by ISO 14001.

PRODUCT DESCRIPTION

The innovative approach in corrugated pipes offered by Konti Hidroplast contributes to solving water problems resulting from the rapid increase in world population and the effects of global warming.

On one hand, the consequences of global warming, the continuous industrialization and the strong and progressive agglomeration are issues which require immediate efforts, on the other hand, these conditions also create excellent opportunities.

KONTI HIDROPLAST® invests in innovative corrugated plastic pipes with high quality, low weight and great strength. The best example is the KONTI KAN PP-HM system with improved corrugating technology, ensuring maximum efficiency, optimized production processes and easy installation.

All sewage, rainwater and drainage systems produced by KONTI HIDROPLAST® meet all the required European and international standards.

KONTI KAN PP-HM pipes conform to the EN 13476-3 standards concerning polymer sewage ducts with structural walls. The profiled external wall of the products ensures a high circumferential rigidity of 16KN/m^2 (SN16). The smooth internal wall surface allows perfect hydraulic parameters.

With the Innovative Technology of reinforced plastic pipe joints at the most important and critical points, the outstanding long-term resistance and tightness is ensured.

The pipes are connected with PP socket connectors. The sealing rings for pipes and fittings are placed in the last groove of the pipe.

The pipes are designed by inside diameter in dimension range of ID 100 – ID 1200mm.

APPLICATION

The KONTI KAN PP-HM pipes and fittings are designed for underground sewage and drainage gravity systems with foundation depths of 0.8 to 8.0 meters. Their high thermal and chemicals resistance makes them suitable for non-pressurized industrial systems. The KONTI KAN PP-HM pipes are highly resistant to cracking and mechanical shocks. The latest research into polypropylene pipes confirm their minimum lifespan of 100 years, while performance tests indicate that their service life will be several times longer. That is why the system is used in construction of:

- Sewerage
- Rainwater drainage
- Sewage and mixed water channels
- Various special solution for industry and business
- Ground drainage
- Domestic drainage

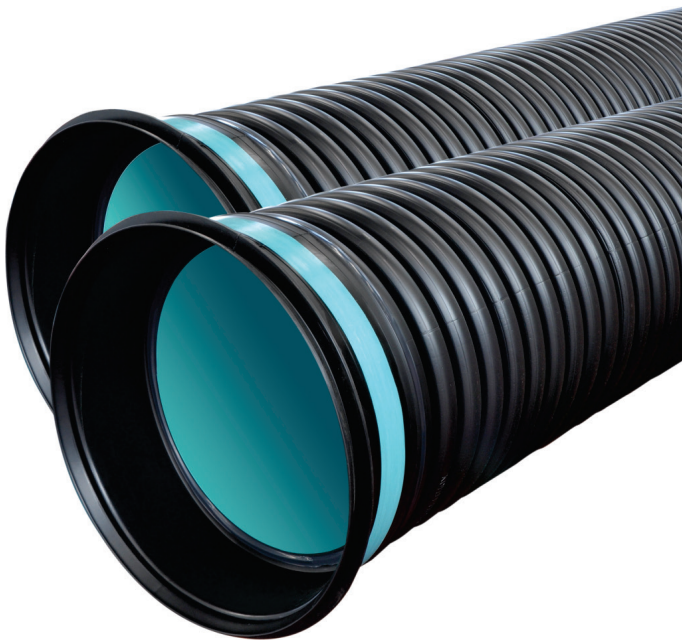

MATERIAL

KONTI KAN PP-HM and molded parts are made of high impact polypropylene – PP-B copolymer.

PROPERTIES

THERMAL STRESS
KONTI KAN PP-HM pipes and the moulded parts made of PP-HM are used to channel sewage and rain water. The requirements of EN 476 concerning the long term temperatures stress levels must be met: up to +45 degrees. The temperature ranges are between -25 ºC and +60 ºC.

COLOUR
- Black profile
- RAL torques blue inside

LENGTH
The standard length of a straight pipe is 6m and 12m

RECYCLING
Almost all thermoplastic, which includes PP-HM, can be ground to form granules for processing new products.

RING STIFNESS
Thanks to the advanced technology of corrugation, the profile design and choice of the right type of raw material, PP-HM, with flexural modulus of 1700-2000 MPa, KONTI KAN PP-HM are lighter but stiffer at the same time. This enables production of high ring stiffness class of pipes. The ring stiffness is calculated according to the EN 9969 standard.

PROPERTIES	VALUE	NORM
DENSITY	900 kg/m3	ISO 1183
MFR	0.3 GR/10 min (230 / 2.16)	ISO 1133
FLEXURAL MODULUS	1700 / 2000 MPA	ISO 527
TENSILE STENGHT AT YIELDS	32 MPa	ISO 527
CHARPY NOTCHED IMPACT STRENGTH	+23C 70 kJ/m^2 - 23C 7 kJ/m^2	ISO 179/1EA ISO 179/1EA

PIPE PROFILE AND DIMENSIONS

DIMENSION RANGE

- ID 100-ID 1200
- SN 8 (flexural modulus 1700 MPa)
- SN 16 (flexural modulus 2000 MPa)

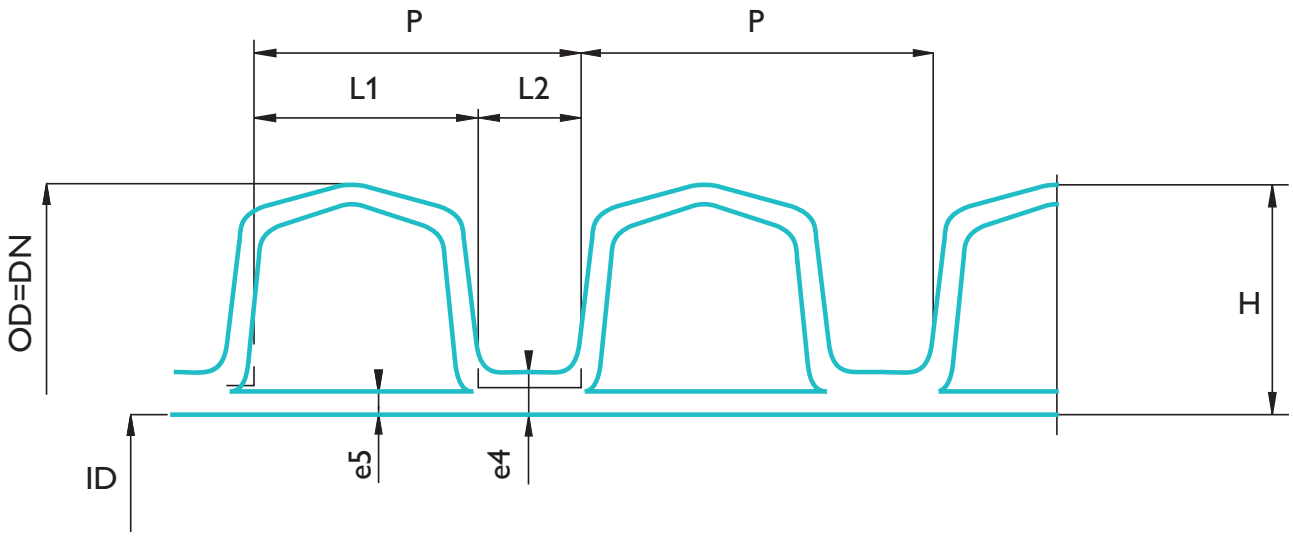

TABLE – SN4

DN	OD	ID	E4	E5	H	P
100	118	100	1.2	1	9.0	10.9
150	161	140	1.5	1	10.5	17
200	230	200	1.6	1.1	15.0	24.15
250	283	248.4	2.1	1.5	17.3	25.9
300	340	298.1	2.6	1.7	21.0	33.7
400	451	397.2	3.5	2.3	26.9	48.13
500	563	495.8	4.3	3	33.6	56.15
600	678	595.8	5.1	3.5	41.1	67.38
800	906	798	5.5	4.6	54.0	107.7
1000	1130	998	6	5.1	66.0	125.6
1200	1350	1198	7	5.5	76.0	150.8

TABLE – SN8

DN	OD	ID	E4	E5	H	P
100	118	100	1.6	0.8	9.0	10.9
150	161	140	1.9	1	10.5	17
200	230	200	2.2	1.1	15.0	24.15
250	283	247	2.8	1.5	18.0	25.9
300	340	296.1	3.4	1.7	21.8	33.7
400	451	395.2	4.5	2.3	27.9	48.13
500	563	493.8	5.5	3	34.8	56.15
600	678	592.8	6.6	3.5	42.6	67.38
800	906	796	6.5	4.6	55.0	107.7
1000	1130	996	7	5.1	67.0	125.6
1200	1350	1196	8	5.5	77.0	150.8

TABLE – SN16

DN	OD	ID	E4	E5	H	P
100	118	99	2	10.5	9.5	10.9
150	161	139	2.3	1.2	11	17
200	230	198	2.4	1.45	16	24.15
250	283	245	3	1.6	19	25.9
300	340	294.5	3.7	1.9	22.75	33.7
400	451	392.5	4.9	2.4	29.25	48.13
500	563	491	6	3.1	36	56.15
600	678	590.5	6.8	3.6	43.75	67.38
800	906	793	7	4.8	56.5	107.7
1000	1130	994	7.6	5.3	68	125.6
1200	1350	1193	8	5.7	78.5	150.8

SOLID CONNECT

INNOVATIVE TECHNOLOGY TO SECURE LONG-TERM TIGHTNESS

Separate PP sockets are produced for connection of PP-HM pipes by rotomolding or injection molding technology.

With the Innovative Technology of reinforced plastic pipe joints at the most important and critical points, the outstanding long-term resistance and tightness is ensured.

SOLID CONNECT consists of insoluble special strengthening bend welded onto external surface to eliminate typical long-term creeping of plastics.

The reinforcement process with wrapper technology provides the required permanent seal via a highly rigid reinforcement bend. Moreover, the extraordinary strengthening process ensures the necessary long-term resistance of the joint against deformation and leaks with an externally welded reinforcement ring.

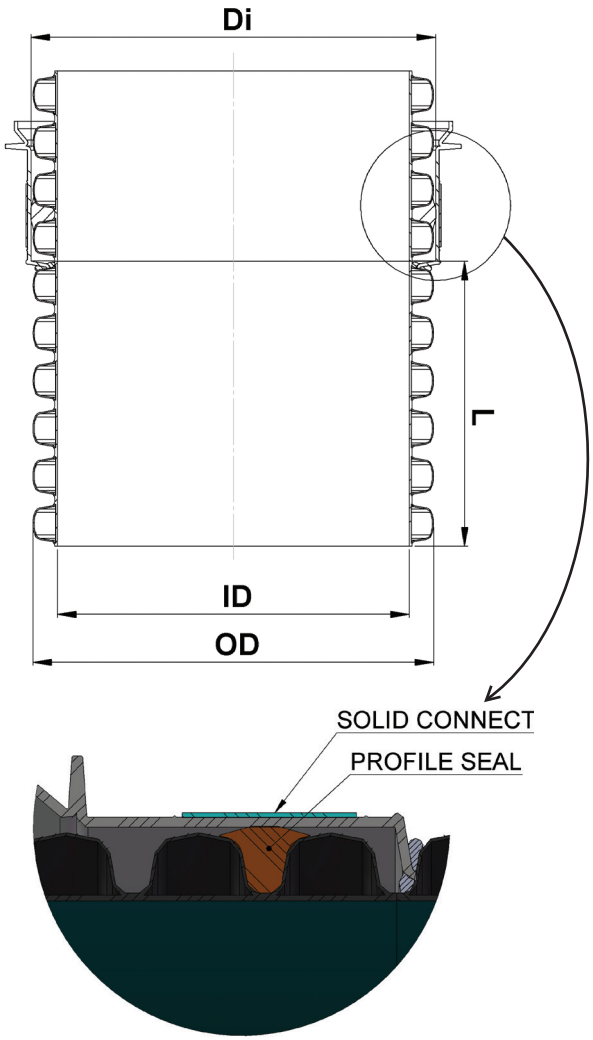

ADVANTAGES

- High circumferential rigidity, exceeding SN 8
- Thanks to flexural modulus of PP-HM material a stiffness class of SN 16 is reached
- Reinforced plastic pipe joint SOLID CONNECT – safe, insoluble
- Low weight which allows easy and fast pipe laying
- High chemical resistance
- Highest abrasion resistance
- Low roughness coefficient resulting in high flow capacity of medium and allowing minimal gradients

The process of connecting the reinforced socket with the pipe is shown in the following pictures:

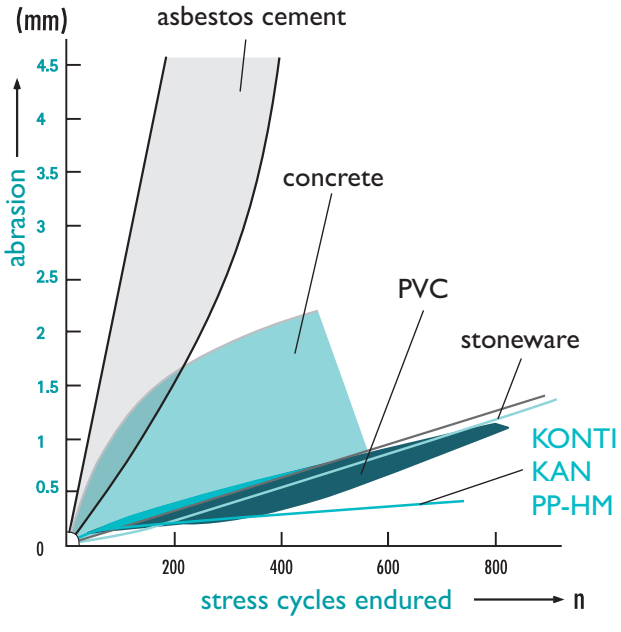

RING FLEXIBILITY

The relaxation capacity of KONTI KAN PP-HM in sewage system means that when under pressure, e.g. through loads caused by movement of ground slippage, the pipes remain elastic and stay in shape. The load is carried back to the ground. If this deformation occurs over a longer period, the tension in the pipe relaxes until there is virtually no tension left.

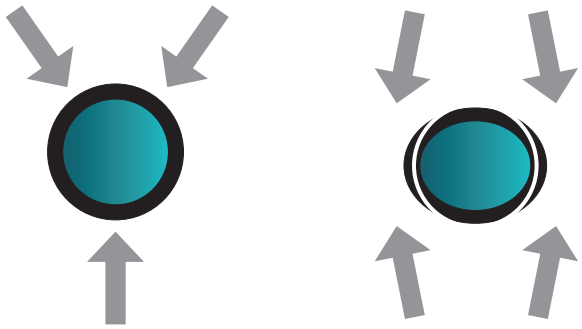

WATER TIGHTNESS

The rigid pipes manifest high bend resistance, at the socket the maximum radius of bending is 1. In time, displacement of the pipes can appear, sourcing from higher bending and resulting in a failure of the socket.

During the ground movement, the flexible pipes adapt to uneven ground or displacement and the pipe system remains undamaged – the system stays tight.

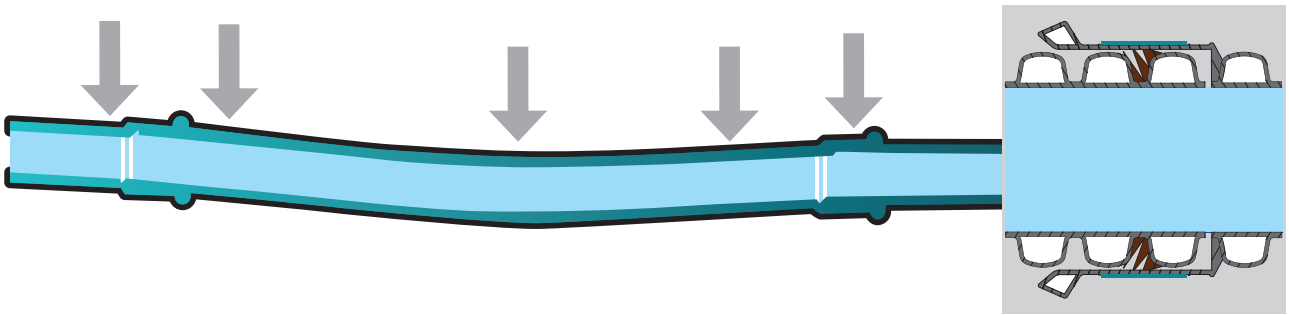

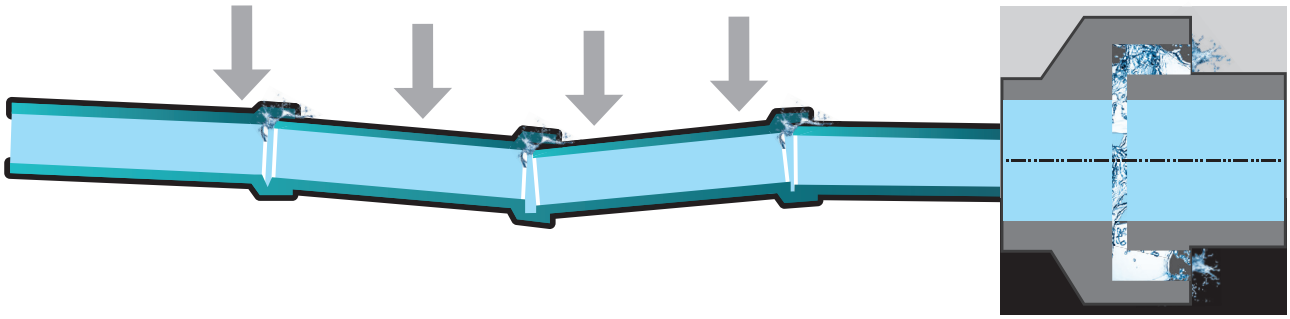

HYDRAULIC BEHAVIOUR

The pipe wall roughness of KONTI KAN PP-HM, as with all plastic pipes due to their very smooth internal surface, is between 0.005 and 0.05 mm. The influence of the connection shaft is taken as a correction value in the regulatory roughness calculation (kb) for streaming technology. Comprehensive information about this can be found in the data sheet ATV-DVWK-A 110-Hydraulic dimensions and performance of rainwater channels and pipes.

The flow amounts for KONTI KAN PP-HM for a roughness value of 0.25 mm corresponding to the ATV A 241 requirements can be seen below:

FLOW RATE TABLE, PIPE FILLING 90%

FLOW CALCULATION

Flow: **Q=A*C*R1/2*I1/2 (l/sek)**

Chezy coefficient:

C =1/n*R2/3*I1/2

Q=A*1/n*R2/3*I1/2

Where:
A – circular section of the pipe (m2)
R – hydraulic radius (m)
I – slope of trench (m/m)

VELOCITY CALCULATION

Velocity: **V =C*R1/2*I1/2(m/s)**

C =1/n*R2/3*I1/2

V = 1/n*R2/3*I1/2

Where:
R – hydraulic radius (m)
R – hydraulic radius for full pipe = ID/4
I – slope of trench (m/m)
Manning number n=0.010

SLOPE	DN	100	150	200	250	300	400	500	600	800	1000	1200
m/m	ID	100	150	200	250	300	400	500	600	800	1000	1200
1/1000	Q (l/s)	1.98	5.83	12.56	22.78	37.04	79.77	144.63	235.18	506.49	918.32	1493.29
0.001	V (m/s)	0.25	0.33	0.40	0.46	0.52	0.64	0.74	0.83	1.01	1.17	1.32
2/1000	Q (l/s)	2.80	8.25	17.77	32.21	52.38	112.81	204.53	332.59	716.28	1298.71	2111.84
0.002	V (m/s)	0.36	0.47	0.57	0.66	0.74	0.90	1.04	1.18	1.43	1.65	1.87
3/1000	Q (l/s)	3.43	10.10	21.76	39.45	64.15	138.16	250.50	407.34	877.26	1590.58	2586.46
0.003	V (m/s)	0.44	0.57	0.69	0.80	0.91	1.10	1.28	1.44	1.75	2.03	2.29
4/1000	Q (l/s)	3.96	11.67	25.13	45.56	74.08	159.53	289.26	470.36	1012.98	1836.65	2986.59
0.004	V (m/s)	0.50	0.66	0.80	0.93	1.05	1.27	1.47	1.66	2.02	2.34	2.64
5/1000	Q (l/s)	4.42	13.04	28.09	50.93	82.82	178.37	323.40	522.88	1132.54	2053.43	3339.11
0.005	V (m/s)	0.56	0.74	0.89	1.04	1.17	1.42	1.65	1.86	2.25	2.62	2.95
6/1000	Q (l/s)	4.85	14.29	30.77	55.79	90.73	195.39	354.26	576.07	1240.64	2249.42	3657.81
0.006	V (m/s)	0.62	0.81	0.98	1.14	1.28	1.56	1.81	2.04	2.47	2.87	3.24
7/1000	Q (l/s)	5.23	15.43	33.24	60.26	98.00	211.04	382.65	622.23	1340.04	2429.66	3950.88
0.007	V (m/s)	0.67	0.87	1.06	1.23	1.39	1.68	1.95	2.20	2.67	3.10	3.50
8/1000	Q (l/s)	5.60	16.50	35.53	64.42	104.76	225.62	409.07	665.19	1432.57	2597.41	4223.67
0.008	V (m/s)	0.71	0.93	1.13	1.31	1.48	1.80	2.08	2.35	2.85	3.31	3.74
9/1000	Q (l/s)	5.94	17.50	37.69	68.33	111.12	239.30	433.88	705.54	1519.47	2754.97	4479.88
0.009	V (m/s)	0.76	0.99	1.20	1.39	1.57	1.91	2.21	2.50	3.02	3.51	3.96
10/1000	Q (l/s)	6.26	18.45	39.73	72.03	117.13	252.25	457.35	743.70	1601.66	2903.99	4722.21
0.01	V (m/s)	0.80	1.04	1.27	1.47	1.66	2.01	2.33	2.63	3.19	3.70	4.18
15/1000	Q (l/s)	7.66	22.59	48.65	88.22	143.45	308.94	560.14	910.85	1961.62	3556.65	5783.50
0.015	V (m/s)	0.98	1.28	1.55	1.80	2.03	2.46	2.85	3.22	3.90	4.53	5.12
20/1000	Q (l/s)	8.85	26.09	56.18	101.86	165.64	356.73	646.79	1051.76	2265.09	4106.87	6678.21
0.02	V (m/s)	1.13	1.48	1.79	2.08	2.34	2.84	3.30	3.72	4.51	5.23	5.91
30/1000	Q (l/s)	10.84	31.95	68.81	124.76	202.87	436.90	792.16	1288.13	2774.15	5029.86	8179.10
0.03	V (m/s)	1.38	1.81	2.19	2.54	2.87	3.48	4.04	4.56	5.52	6.41	7.24
40/1000	Q (l/s)	12.51	36.89	79.45	144.06	234.25	504.49	914.70	1487.41	3203.31	5807.99	9444.42
0.04	V (m/s)	1.59	2.09	2.53	2.94	3.32	4.02	4.66	5.26	6.38	7.40	8.35
50/1000	Q (l/s)	13.99	41.25	88.83	161.06	261.90	564.04	1022.67	1662.97	3581.41	6493.53	10559.18
0.05	V (m/s)	1.78	2.34	2.83	3.28	3.71	4.49	5.21	5.88	7.13	8.27	9.34

QUALITY GUARANTEE

KONTI KAN PP-HM pipes are made with the most technologically advanced machines and maintaining the highest level of technology and quality. The quality management system, introduced in 1998, is constantly documented. All product stages and customer service are controlled by OQS in accordance with the EN ISO 9001:2000 standard.

PPHM's quality is confirmed by numerous certificates among which are: Exact Certification, Ead Certificate, Certificate issued by The Faculty of Mechanical Engineering – Skopje, etc.

STANDARDS

EN 13476-1	PART1 – GENERAL REQUIREMENTS AND PERFORMANCE CHARACTERISTICS
EN 13476-3	PART 3 – SPECIFICATIONS FOR PIPES AND FITTINGS WITH SMOOTH INTERNAL AND PROFILED EXTERNAL SURFACE AND THE SYSTEM .TYPE B
EN 13476-4	PART 4 – ASSESEMENT OF CONFORMITY
EN 744 -	PLASTICS PIPING AND DUCTING SYSTEM – THERMOPLASTIC PIPES – TEST METHOD FOR RESISTANCE TO EXTERNAL BLOW BY ROUND – THE-CLOCK METHOD
EN 1053 -	THERMOPLASTICS PIPING SYSTEM FOR NON PRESSURE APPICATIONS – TEST METHOD OF WATERTIGHTNESS
EN 1277	PLASTICS PIPING SYSTEMS – THERMOPLASTICS PIPING SYSTEM FOR NON PRESSURE APPICATIONS – TEST METHOD OF LEAK TIGHTNESS OF ELASTOMERIC SEALING RING TYPE JOINTS
EN ISO 9969	THERMOPLASTICS PIPES – DETERMINATION OF RING STIFNESS
EN ISO 9967	PLASTICS PIPES – DETERMINATION OF CREEP RATIO
ISO 12091	STRUCTURED WALL THERMOPLASTICS PIPES – OVEN TEST
ISO 13967	THERMOPLASTICS FITTINGS – DETERMINATION OF RING STIFFNESS
EN 681-2	ELASTOMERIC SEALS – MATERIAL REQUIREMENTS FOR PIPE JOINTS SEALS USED IN WATER AND DRAINAGE APPLICATIONS – PART 2: THERMOPLASTIC ELASTOMERS
EN 1610	CONSTRUCTION AND TESTING OF DRAINS AND SEWERS

TRANSPORT UNLOADING AND STORAGE

KONTI KAN PP-HM pipes should be transported on vehicles of proper length. The pipe ends should not project from the load body for more than 1 meter. The pipes should be transported with protected end surface from damage. They can be transported as a loose product, but should be supported and secured along their entire length while travelling.

When unloading, pipes and fittings should be deposited linearly on a smooth surface free from stones or hard objects.

The sealing rings should be protected from exposure to UV radiation and stored in covered dry rooms.

Do not store in stacks of over 3 meters.

ASSEMBLING OF KONTI KAN PP-HM PIPES WITH PVC/PP/PE CONNECTION PARTS

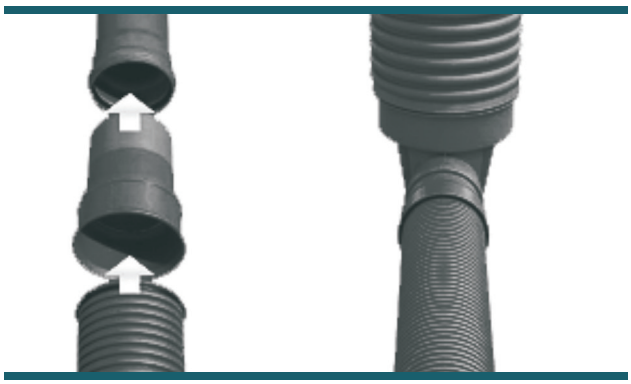

Step 1 Step 2

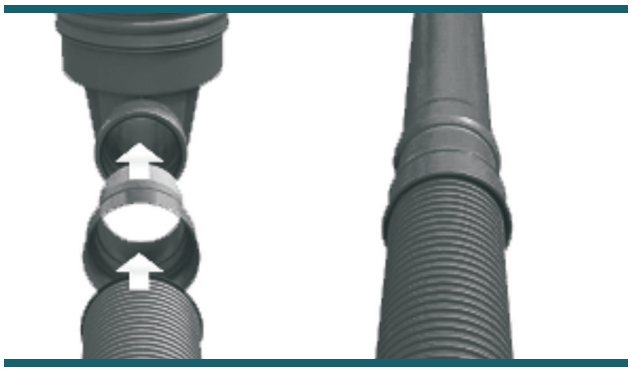

Step 3 Step 4

CONNECTION OF KONTI KAN PP-HM PIPE

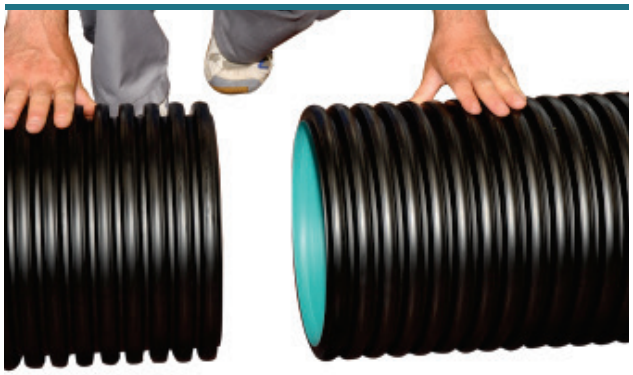

Step 1

Step 2

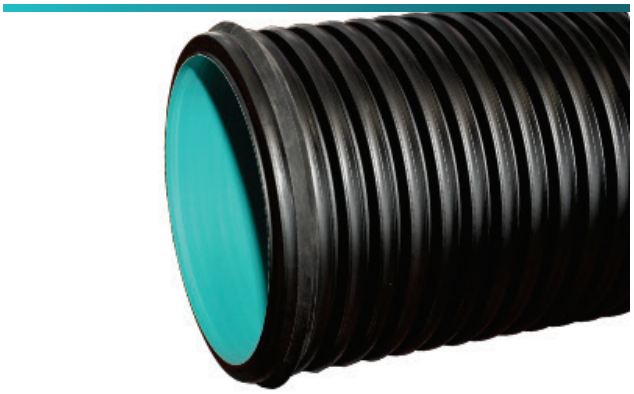

Step 3

Step 4

Step 5

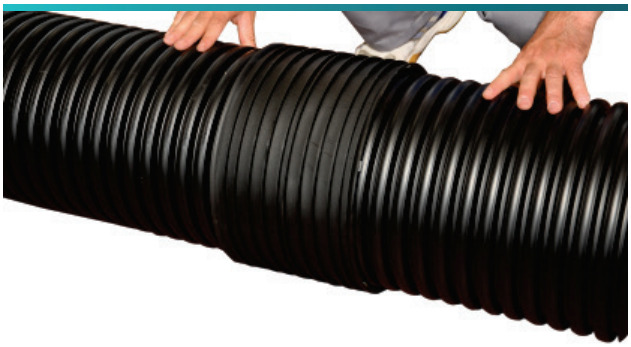

Step 6

ASSEMBLING OF KONTI KAN PP-HM PIPES WITH CONCRETE MANHOLES

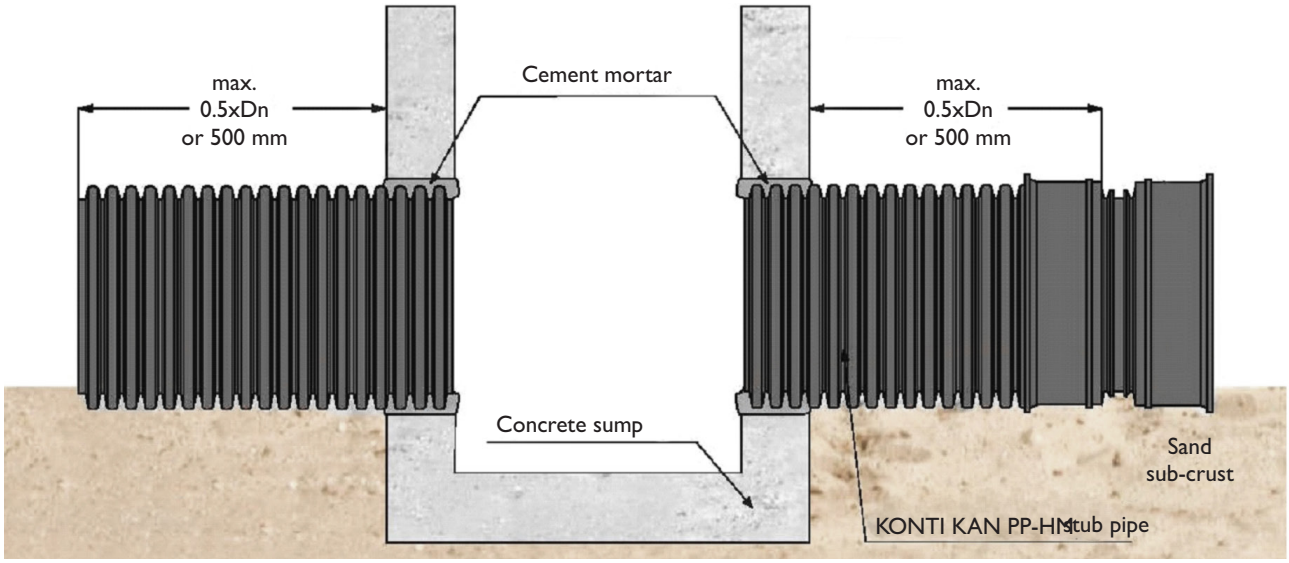

ASSEMBLING OF KONTI KAN PP-HM PIPES WITH PE-PP MANHOLES

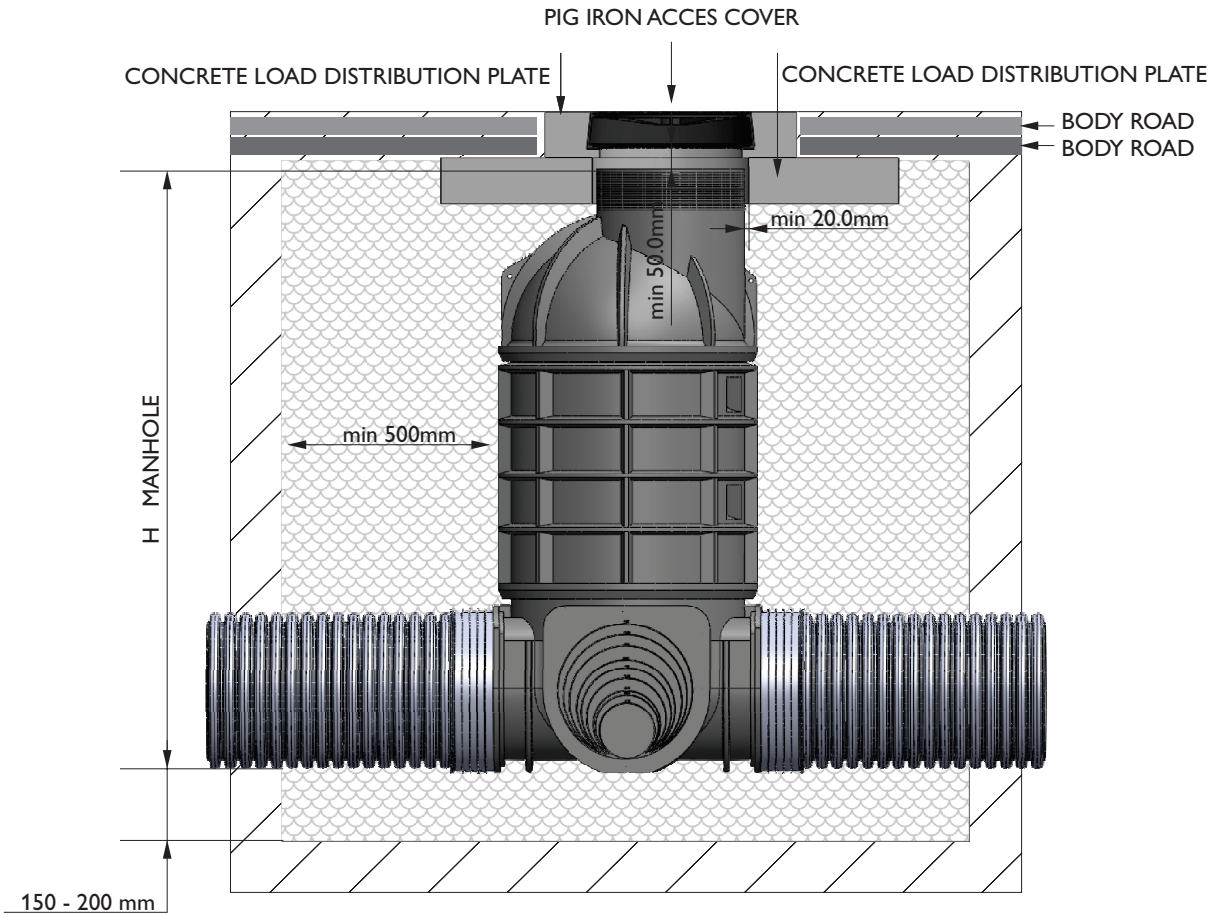

KONTI HIDROPLAST®

KONTI KAN PP-HM FITTINGS

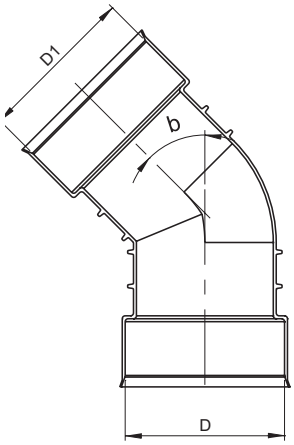

INJECTION MOULDED ELBOW			
PPHM "ID"			
ELBOW	DIMENSIONS		
	D	D1	ß
	(mm)	(mm)	(º)
ID300	342.5	342.5	45
ID250	285	285	45
ID200	232	232	45
ID300	342.5	342.5	90
ID250	285	285	90
ID200	232	232	90

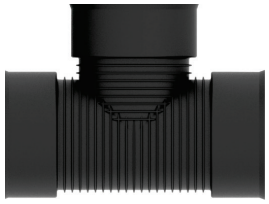

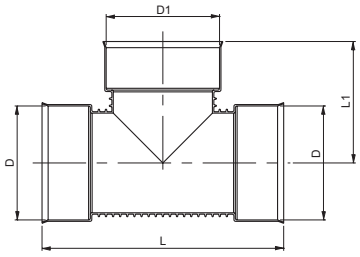

INJECTION MOULDED TEE				
PPHM "ID"				
TEE	DIMENSIONS			
	D	D1	L1	L1
	(mm)	(mm)	(mm)	(mm)
ID200	232	232	500	260
ID250	285	285	535	272
ID300	342.5	342.5	690	355

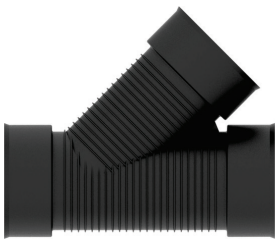

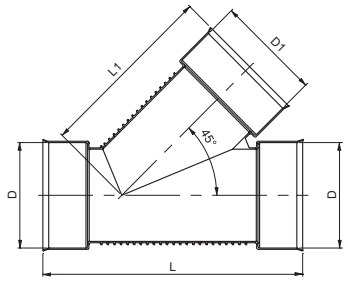

INJECTION MOULDED Y-BRANCH				
PPHM "ID"				
Y-BRANCH	DIMENSIONS			
	D	D1	L	L1
	(mm)	(mm)	(mm)	(mm)
ID200	232	232	500	260
ID250	285	285	535	272
ID300	342.5	342.5	690	355

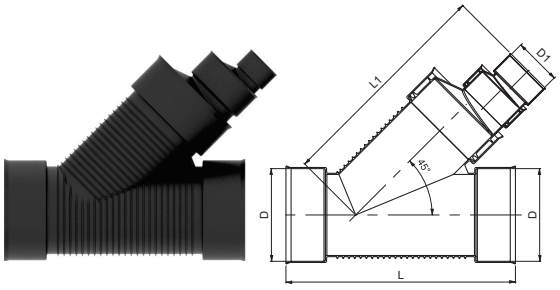

INJECTION MOULDED Y-BRANCH RREDUCER				
PPHM "ID"				
Y-BRANCH REDUCER	DIMENSIONS			
	D	D1	L	L1
	(mm)	(mm)	(mm)	(mm)
ID300 x ID250	342.5	285	815	725
ID300 x ID200	342.5	232	815	688
ID250 x ID200	285	232	665	590

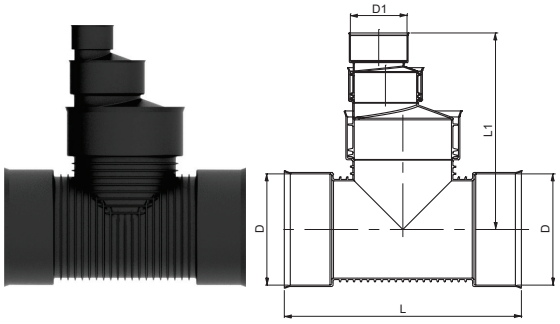

INJECTION MOULDED TEE REDUCER				
PPHM "ID"				
TEE REDUCER	DIMENSIONS			
	D	D1	L	L1
	(mm)	(mm)	(mm)	(mm)
ID300 x ID250	342.5	285	690	480
ID300 x ID200	342.5	232	690	444
ID250 x ID200	285	232	535	390

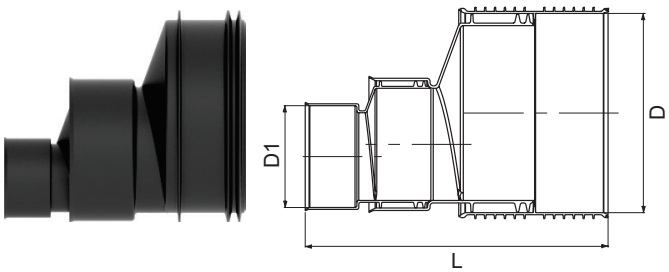

INJECTION MOULDED REDUCER			
PPHM "ID"			
REDUCER	DIMENSIONS		
	D	D1	L1
	(mm)	(mm)	(mm)
ID300 x ID250	342.5	285	375
ID300 x ID200	342.5	232	339
ID250 x ID200	285	232	313

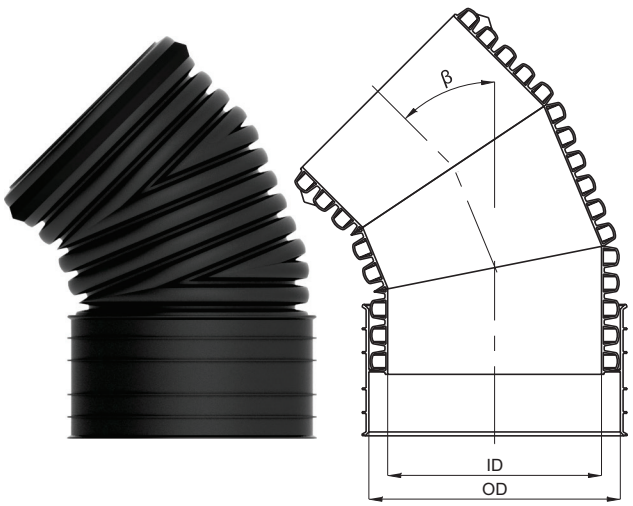

WELDED ELBOW			
PPHM "ID"			
ELBOW	DIMENSIONS		
	D	D1	ß
	(mm)	(mm)	(º)
ID200	230	200	11
ID250	284	250	11
ID300	342	300	11
ID400	455	400	11
ID500	568	500	11
ID600	682	600	11
ID800	905	800	11
ID1000	1130	1000	11
ID1200	1350	1200	11

WELDED ELBOW			
PPHM "ID"			
ELBOW	DIMENSIONS		
	D	D1	ß
	(mm)	(mm)	(º)
ID200	230	200	22
ID250	284	250	22
ID300	342	300	22
ID400	455	400	22
ID500	568	500	22
ID600	682	600	22
ID800	905	800	22
ID1000	1130	1000	22
ID1200	1350	1200	22

WELDED ELBOW			
PPHM "ID"			
ELBOW	DIMENSIONS		
	D	D1	ß
	(mm)	(mm)	(º)
ID400	455	400	45
ID500	568	500	45
ID600	682	600	45
ID800	905	800	45
ID1000	1130	1000	45
ID1200	1350	1200	45

WELDED ELBOW			
PPHM "ID"			
ELBOW	DIMENSIONS		
	D	D1	ß
	(mm)	(mm)	(º)
ID200	230	200	60
ID250	284	250	60
ID300	342	300	60
ID400	455	400	60
ID500	568	500	60
ID600	682	600	60
ID800	905	800	60
ID1000	1130	1000	60
ID1200	1350	1200	60

WELDED ELBOW			
PPHM "ID"			
ELBOW	DIMENSIONS		
	D	D1	ß
	(mm)	(mm)	(º)
ID400	455	400	90
ID500	568	500	90
ID600	682	600	90
ID800	905	800	90
ID1000	1130	1000	90
ID1200	1350	1200	90

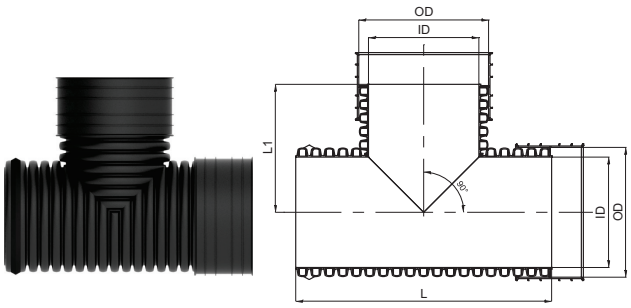

WELDED TEE				
PPHM "ID"				
TEE	DIMENSIONS			
	D	D1	L	L1
	(mm)	(mm)	(mm)	(mm)
ID250	284	250	803	401
ID400	455	400	1106	553
ID500	568	500	1234	589
ID600	682	600	1346	639
ID800	905	800	1616	592
ID1000	1130	1000	1884	691
ID1200	1350	1200	2111	829

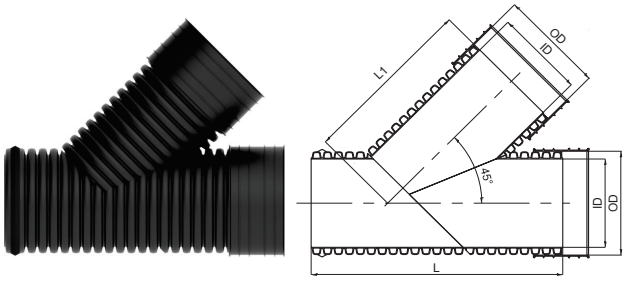

WELDED Y-BRANCH				
PPHM "ID"				
Y-BRANCH	DIMENSIONS			
	D	D1	L	L1
	(mm)	(mm)	(mm)	(mm)
ID400	455	400	1299	866
ID500	568	500	1459	1066
ID600	682	600	1683	1211
ID800	905	800	2046	1400
ID1000	1130	1000	2386	1633
ID1200	1350	1200	2865	1960

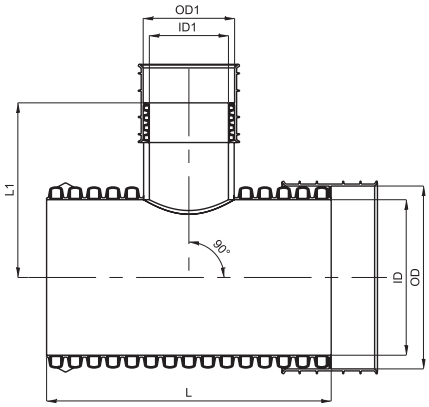

WELDED Y-BRANCH REDUCER						
PPHM "ID"						
TEE REDUCER	DIMENSIONS					
	OD	ID	OD1	ID1	L	L1
	(mm)	(mm)	(mm)	(mm)	(mm)	(mm)
ID300XID200	342	300	230	200	607	317
ID400XID200	455	400	230	200	673	374
ID400XID250	455	400	284	250	722	381
ID400XID300	455	400	342	300	770	412
ID500XID200	568	500	230	200	729	430
ID500XID250	568	500	284	250	785	438
ID500XID300	568	500	342	300	842	469
ID500XID400	568	500	455	400	954	526
ID600XID200	682	600	230	200	740	487
ID600XID250	682	600	284	250	740	495
ID600XID300	682	600	342	300	808	526
ID600XID400	682	600	455	400	942	583
ID600XID500	682	600	568	500	1077	615

WELDED Y-BRANCH REDUCER						
PPHM "ID"						
TEE REDUCER	DIMENSIONS					
	OD	ID	OD1	ID1	L	L1
	(mm)	(mm)	(mm)	(mm)	(mm)	(mm)
ID800XID200	905	800	230	200	754	599
ID800XID250	905	800	284	250	754	606
ID800XID300	905	800	342	300	862	637
ID800XID400	905	800	455	400	969	695
ID800XID500	905	800	568	500	1077	727
ID800XID600	905	800	682	600	1508	854
ID1000XID200	1130	1000	230	200	754	711
ID1000XID250	1130	1000	284	250	754	719
ID1000XID300	1130	1000	342	300	879	750
ID1000XID400	1130	1000	455	400	1005	807
ID1000XID500	1130	1000	568	500	1130	839
ID1000XID600	1130	1000	682	600	1507	967
ID1200XID200	1350	1200	230	200	905	821
ID1200XID250	1350	1200	284	250	905	829
ID1200XID300	1350	1200	342	300	905	860
ID1200XID400	1350	1200	455	400	1056	917
ID1200XID500	1350	1200	568	500	1206	949
ID1200XID600	1350	1200	682	600	1659	1279

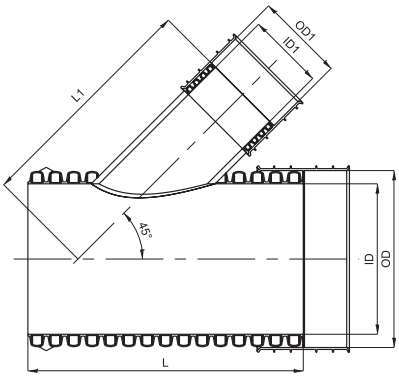

WELDED Y-BRANCH REDUCER						
PPHM "ID"						
Y-BRANCH REDUCER	DIMENSIONS					
	OD	ID	OD1	ID1	L	L1
	(mm)	(mm)	(mm)	(mm)	(mm)	(mm)
ID300XID200	342	300	230	200	876	603
ID400XID200	455	400	230	200	962	683
ID400XID250	455	400	284	250	1058	717
ID400XID300	455	400	342	300	1106	778
ID500XID200	568	500	230	200	1010	763
ID500XID250	568	500	284	250	1066	797
ID500XID300	568	500	342	300	1178	857
ID500XID400	568	500	455	400	1346	972
ID600XID200	682	600	230	200	1010	844
ID600XID250	682	600	284	250	1077	878
ID600XID300	682	600	342	300	1144	938
ID600XID400	682	600	455	400	1346	1052
ID600XID500	682	600	568	500	1481	1141

WELDED Y-BRANCH REDUCER						
PPHM "ID"						
Y-BRANCH REDUCER	DIMENSIONS					
	OD	ID	OD1	ID1	L	L1
	(mm)	(mm)	(mm)	(mm)	(mm)	(mm)
ID800XID200	905	800	230	200	969	1001
ID800XID250	905	800	284	250	1077	1036
ID800XID300	905	800	342	300	1185	1096
ID800XID400	905	800	455	400	1292	1210
ID800XID500	905	800	568	500	1508	1298
ID800XID600	905	800	682	600	1616	1333
ID1000XID200	1130	1000	230	200	1005	1160
ID1000XID250	1130	1000	284	250	1130	1195
ID1000XID300	1130	1000	342	300	1256	1255
ID1000XID400	1130	1000	455	400	1382	1369
ID1000XID500	1130	1000	568	500	1507	1457
ID1000XID600	1130	1000	682	600	1633	1492
ID1200XID200	1350	1200	230	200	1206	1316
ID1200XID250	1350	1200	284	250	1206	1350
ID1200XID300	1350	1200	342	300	1357	1410
ID1200XID400	1350	1200	455	400	1508	1524
ID1200XID500	1350	1200	568	500	1659	1613
ID1200XID600	1350	1200	682	600	1810	1647

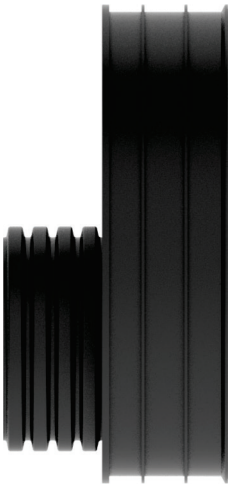

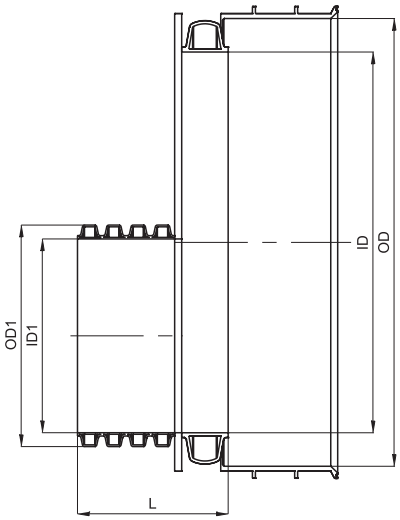

WELDED REDUCER					
PPHM "ID"					
Y-BRANCH REDUCER	DIMENSIONS				
	OD	ID	OD1	ID1	L
	(mm)	(mm)	(mm)	(mm)	(mm)
ID300XID200	342	300	230	200	131
ID400XID200	455	400	230	200	131
ID400XID250	455	400	284	250	140
ID400XID300	455	400	342	300	179
ID500XID200	568	500	230	200	131
ID500XID250	568	500	284	250	140
ID500XID300	568	500	342	300	179
ID500XID400	568	500	455	400	251
ID600XID200	682	600	230	200	131
ID600XID250	682	600	284	250	140
ID600XID300	682	600	342	300	179
ID600XID400	682	600	455	400	251
ID600XID500	682	600	568	500	291

WELDED REDUCER					
PPHM "ID"					
Y-BRANCH REDUCER	DIMENSIONS				
	OD	ID	OD1	ID1	L
	(mm)	(mm)	(mm)	(mm)	(mm)
ID800XID200	905	800	230	200	131
ID800XID250	905	800	284	250	140
ID800XID300	905	800	342	300	179
ID800XID400	905	800	455	400	251
ID800XID500	905	800	568	500	291
ID800XID600	905	800	682	600	279
ID1000XID200	1130	1000	230	200	131
ID1000XID250	1130	1000	284	250	140
ID1000XID300	1130	1000	342	300	179
ID1000XID400	1130	1000	455	400	251
ID1000XID500	1130	1000	568	500	291
ID1000XID600	1130	1000	682	600	279
ID1000XID800	1130	1000	905	800	333
ID1200XID200	1350	1200	230	200	131
ID1200XID250	1350	1200	284	250	140
ID1200XID300	1350	1200	342	300	179
ID1200XID400	1350	1200	455	400	251
ID1200XID500	1350	1200	568	500	291
ID1200XID600	1350	1200	682	600	279
ID1200XID800	1350	1200	905	800	333
ID1200XID1000	1350	1200	1130	1000	387

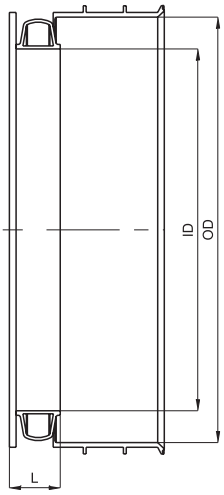

WELDED END CAP			
PPHM "ID"			
END CAP	DIMENSIONS		
	OD	ID	L
	(mm)	(mm)	(mm)
ID200	230	200	113
ID250	284	250	118
ID300	342	300	145
ID400	455	400	180
ID500	568	500	195
ID600	682	600	198
ID800	905	800	300
ID1000	1130	1000	385
ID1200	1350	1200	460

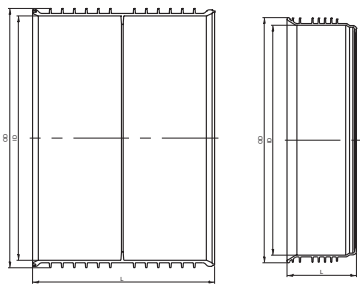

SOCKET			
PPHM "ID"			
SOCKET	DIMENSIONS		
	OD	ID	L
	(mm)	(mm)	(mm)
ID 100	250	119.7	130.7
ID 200	180	232.3	251.3
ID 250	195	284.8	304.8
ID 300	250	342.4	363.4
ID 400	320	455.5	487.5
ID 500	350	568.6	604.6
ID 600	355	684.8	723.8
ID 800 injection	280	917.0	970.0
ID 800 rotomold	324	917.0	1027.0
ID 1000	365	1121.1	1252.1
ID 1200	435	1343.3	1481.3

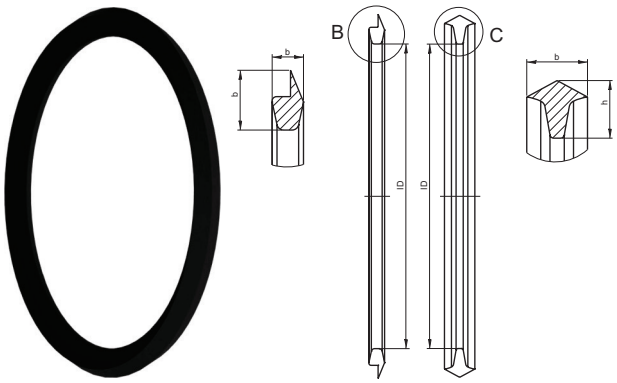

GASKET			
PPHM "ID"			
GASKET	DIMENSIONS		
	OD	ID	L
	(mm)	(mm)	(mm)
ID 100	79	47	32
ID 200	160	18	19
ID 250	201	19	21,5
ID 300	246	26	25
ID 400	358	34	33
ID 500	420	38	40
ID 600	505	55	49
ID 800	680	62	63
ID 1000	873	69	68
ID 1200	1055	95	53

CERTIFICATES

IQNet
THE INTERNATIONAL CERTIFICATION NETWORK
CERTIFICATE
KONTI HIDROPLAST doocel
Industriska b.b., 1480 Gevgelija, Macedonia
ENVIRONMENTAL MANAGEMENT SYSTEM
ISO 14001:2004

IQNet
THE INTERNATIONAL CERTIFICATION NETWORK
CERTIFICATE
KONTI HIDROPLAST DOO
Industriska b.b., 1480 Gevgelija, Macedonia
OCCUPATIONAL HEALTH AND SAFETY MANAGEMENT SYSTEM
BS OHSAS 18001:2007

IQNet
THE INTERNATIONAL CERTIFICATION NETWORK
CERTIFICATE
KONTI HIDROPLAST doocel
Industriska b.b., 1480 Gevgelija, Macedonia
QUALITY MANAGEMENT SYSTEM
ISO 9001:2008

qualityaustria
CERTIFICATE
KONTI HIDROPLAST DOO
OCCUPATIONAL HEALTH AND SAFETY MANAGEMENT SYSTEM
BS OHSAS 18001:2007

qualityaustria
CERTIFICATE
KONTI HIDROPLAST doocel
ENVIRONMENTAL MANAGEMENT SYSTEM
ISO 14001:2004

qualityaustria
CERTIFICATE
KONTI HIDROPLAST doocel
QUALITY MANAGEMENT SYSTEM
ISO 9001:2008

EXACT
„СЕРТИФИКАЦИЈА" ЕАД
CERTIFICATE
Product
Trade mark
Manufacturer
Abide by
Issued on: 06.02.2013
Valid until: 05.02.2016

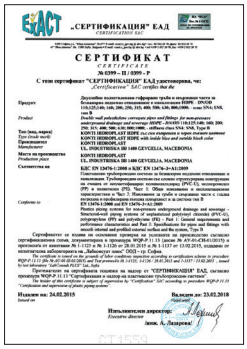
EXACT
„СЕРТИФИКАЦИЈА" ЕАД
СЕРТИФИКАТ
CERTIFICATE
Издаден на: 24.02.2015
Валиден до: 23.02.2018

EXACT
„СЕРТИФИКАЦИЈА" ЕАД
CERTIFICATE
Product
Type (trade mark)
Manufacturer
Production place
Conforms to
Issued on: 18.04.2013
Valid until: 17.04.2016

EXACT
„СЕРТИФИКАЦИЈА" ЕАД
СЕРТИФИКАТ
CERTIFICATE
Издаден на: 31.03.2014
Валиден до: 30.03.2017

EXACT
„СЕРТИФИКАЦИЈА" ЕАД
СЕРТИФИКАТ
CERTIFICATE
Издаден на: 08.08.2014
Валиден до: 07.08.2017

EXACT
„СЕРТИФИКАЦИЈА" ЕАД
СЕРТИФИКАТ
CERTIFICATE
Издаден на: 30.09.2014
Валиден до: 29.09.2017

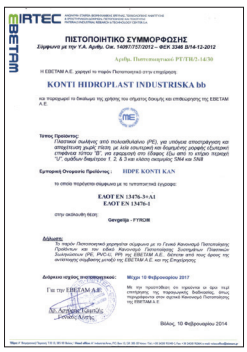
IRTEC
ΠΙΣΤΟΠΟΙΗΤΙΚΟ ΣΥΜΜΟΡΦΩΣΗΣ
KONTI HIDROPLAST INDUSTRISKA bb
ΕΙΔΟΣ ΣΩΛΗΝΑ: KONTI KAN
ΕΦΑΡΜΟΓΗ: ΥΠΟΝΟΜΗ
Βόλος, 10 Φεβρουαρίου 2014

IRTEC
CERTIFICATE OF CONFORMITY
According to MD 1439/7/7/2012 – GG 2348 B/14-12-2012
CERTIFICATE No PTTB/9/1436
KONTI HIDROPLAST INDUSTRISKA bb
Pipes and fittings made of polypropylene (PP), for non-pressure underground drainage and sewerage, with smooth internal and profiled external surface type "B", which are intended to be used buried underground
Trade names of products: KONTI KAN PP RIM
ELOT EN 13476-3+A1
ELOT EN 13476-1
Gevgelija - SYRIA
Date of initial issue: 23 September 2014
Valid until: 22 September 2017
Volos, 23 September 2014

Institut IGH d.d.
IGH Cert
CERTIFIKAT O STALNOSTI SVOJSTAVA
1/05-ZGP-2065
KONTI KAN PP (PPHM) cijevi i spojnice za netlačnu podzemnu odvodnju i kanalizaciju (cijevni sustavi sa strukturiranom stjenkom) tip B
DN/OD 110 - DN/OD 1200 (SN4, SN8)
DN/ID 100 - DN/ID 1200 (SN4, SN8)
Hidrocom d.o.o.
A.Mihanovića bb, HR-33405 Pitomača
Konti Hidroplast DOOEL
ul.Industriska bb, MK-1480 Gevgelija
HRN EN 13476-1:2007 i HRN EN 13476-3:2009
proizvod ispunjava sve gore propisane zahtjeve.
Zagreb, 24. srpanj 2014.

Institut IGH d.d.
IGH Cert
CERTIFIKAT O STALNOSTI SVOJSTAVA
1/05-ZGP-2067
KONTI KAN PE (PEHD) cijevi i spojnice za netlačnu podzemnu odvodnju i kanalizaciju (cijevni sustavi sa strukturiranom stjenkom) tip B
DN/OD 110 - DN/OD 1200 (SN4, SN8)
DN/ID 100 - DN/ID 1200 (SN4, SN8)
Hidrocom d.o.o.
A.Mihanovića bb, HR-33405 Pitomača
Konti Hidroplast DOOEL
ul.Industriska bb, MK-1480 Gevgelija
HRN EN 13476-1:2007 i HRN EN 13476-3:2009
proizvod ispunjava sve gore propisane zahtjeve.
Zagreb, 24. srpanj 2014.

Institut IGH d.d.
IGH Cert
CERTIFIKAT O STALNOSTI SVOJSTAVA
1/05-ZGP-1732
KONTI KAN SPIRAL PP I PE
Cijevi i spojnice za netlačnu podzemnu odvodnju i kanalizaciju, tip A2
DN/OD 110 - DN/OD 2000 (SN4, SN8)
Hidrocom d.o.o.
A.Mihanovića bb, HR-33405 Pitomača
Konti Hidroplast DOOEL
ul.Industriska bb, MK-1480 Gevgelija
HRN EN 13476-1:2007 i HRN EN 13476-2:2007
proizvod ispunjava sve gore propisane zahtjeve.
Zagreb, 4. rujan 2013.

Autorizovaná osoba 227
Výzkumný ústav pozemních staveb - Certifikační společnost, a.s.
CERTIFIKÁT VÝROBKU
č. 227/CS/2011/0231
Trubky KONTI KAN PP-HM
SN8 z polypropylenu se strukturovanou stěnou dvoupláštové
DN 200 - DN 1200, spojované pryžovými těsnícími hrdlový
PLASTMONT BUREŠ, s.r.o.
KONTI HIDROPLAST
Industriska b.b., 1480 Gevgelija, Makedonie
Praha, 23.8.2011

Authorized Body 227
Building Research Institute in Prague – Certification Company, Ltd.
PRODUCT CERTIFICATE
No. 227/CS/2011/0231
Pipes KONTI KAN PP-HM
SN8 polypropylene structured-wall double-walled
DN 200 - DN 1200, pressed with rubber sealing rings
PLASTMONT BUREŠ, s.r.o.
KONTI HIDROPLAST
Industriska b.b., 1480 Gevgelija, Macedonia
Prague, 23.8.2011

LABORATORY TESTING

TIGHTNESS OF ELASTOMETRIC RING SEAL JOINT

IMPACT STRENGTH

DENSITY

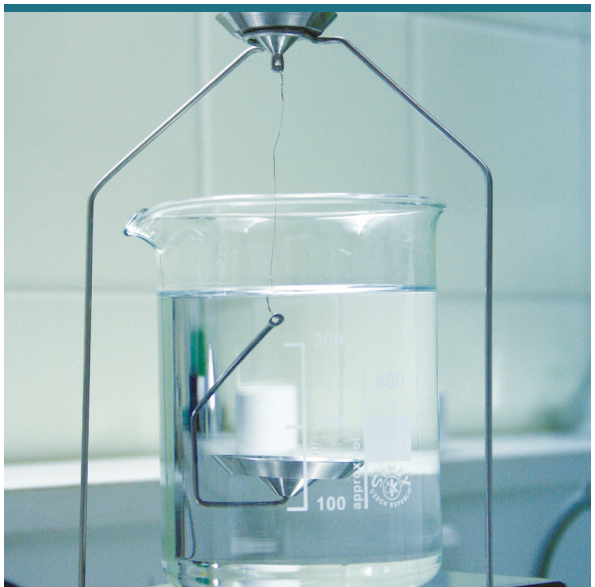

RING STIFFNESS / RING FLEXIBILITY

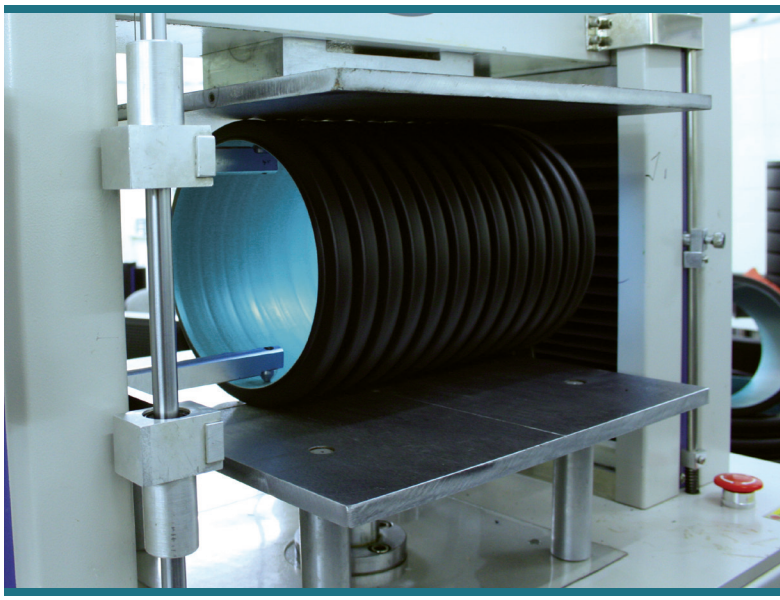

MELT MASS-FLOW RATE

RESISTANCE TO HEATING – OVEN TEST

KONTI HIDROPLAST®

MACEDONIA
1480 Gevgelija, Industriska bb
Office - Tirana AlbaniaBul.
Zogu I, Pallati 9, kati 2 nr.4

+355 67 20 22 043 +355 67 20 21 043
+389 75 221 043

info@kontihidroplast-al.com
rami.j@kontihidroplast-al.com

www.kontihidroplast-al.com

qualityaustria SYSTEM CERTIFIED
ISO 9001:2008 No. 01442/0
ISO 14001:2004 No. 00211/0