KONTI HIDROPLAST®
&
INTER CONSTRUCTION

IGH

EXACT

CERTIFIED IQNet MANAGEMENT SYSTEM

qualityaustria
SYSTEM CERTIFIED
ISO 9001:2008 No. 10310/0
ISO 14001:2004 No. 01397/0
BS OHSAS 18001: 2007 No. 00569/0

POLYETHYLENE AND POLYPROPYLENE

INTERHOL MANHOLE

BARRIERES TANKS

INTRODUCTION

With our 38 years of experience as a dynamic and developing company, Konti Hidroplast is always ready to accept all challenges and market needs. As before , we are continuing with our development of new products and the adoption of new technologies. Aiming to answer to the needs of the infrastructure market - canalization, appeared the necessity to broaden the capacities and to open a new producing unit : Inter Construction, as our daughter – company.
Inter-Construction is a company that owns a rotomoulding technology and it is situated in the industrial zone of the village Prdejci, Gevgelija. It is equipped with production capacities for rotomoulding products. Our employees are highly motivated, very well trained and responsible for the execution of the various processes.
With the utilization of the newest technological systems, this experienced team works to satisfy the demands of the market and to conquer new products.
A proof for our successful work and the quality of the production process are the certificates of quality ISO 9001:2008, ISO 14001:2004 and OHSAS 18001:2007.
From the big variety of products that are offered by this production unit we would like to distinguish the basic product - the revisory INTERHOL manholes, that will be presented further in this catalogue.

FOR ROTOMOULDING TECHNOLOGY

Rotomoulding is a technology of production, used for making products in large volumes. Advantages of these products, compared to other technologies are:

- Economic
- Consistency of quality
- Allows freedom in shaping the products

GENERAL CHARACTERISTIC OF INTERHOL MANHOLES

The INTERHOL manholes are produced from polyethylene LLDPE; MDPE ;HDPE and polypropylene PP, according to the standard EN 13598 - 1 from ecological material with very high quality that can be easily recycled and thermally treated. For control manholes are used manholes with inside diameter 400 mm (DN/ID 400), 800 mm DN/ID < 800, according to the standard EN 13598 - 1. For easy and constant access to the people in manhole according to the EN13598-2 standard requirements have DN/ID >= 1000mm. The INTERHOL Manholes made from polyethylene and polypropylen are a product with very high quality and excellent technical characteristics and advantages in comparison with concrete manholes and they exclude the possible problems and damages such as:

- Rusted scales
- Leaks and mixing with underground waters
- Difficulties during assembling and transport issues because of the huge weight
- Impossibilities for connections between the PE pipes and the concrete manholes

Table : Characteristic of materials (PE and PP)

Characteristc	Unit	Standard	Value	
			LLDPE/MDPE/HDPE	PP
Melt Flow Index (MFI)	g/10min	ISO 1133	4-6	13-15
Consistency	g/cm^3	ISO 1183	0.935-0.945	0.9
Stretching with pauses	Mpa	ISO 178	600-750	1100-1300

IMPORTANT CHARACTERISTICS OF THE INTERHOL MANHOLE

With the goal to satisfy the criteria regarding the ecology of wastewaters, the concrete manhole that has been a standard product for many decades, today is being actively replaced with the polyethylene and polypropylene manhole that is completely waterproof. The law regulation urges protection of the environment or most of all protection of the wastewaters – that is why it is recommended the embedding of materials that are waterproof.

TEMPERATURE RESISTANCE
The INTERHOL Manholes are continuously exposed to different temperatures. The form of the manhole remains unchanged even during extremely high summer temperatures. These manholes cannot be damaged from the law temperatures, neither from the boiling wastewaters from the industries. PE and PP is stabile on a temperature range from -35° to +60° C.

WATERPROOF
PE and PP INTERHOL Manholes are 100% waterproof, the possibility of leaks does not exist. The compactness guaranties the characteristic of being waterproof. The welded junction of the manhole and the polyethylene pipes is also very compact.

LONG LIFETIME
These manholes that are produced from PE and PP completely exclude possible problems or damages that can show up while using the other traditional manholes used until now. The characteristics of the PE and PP as a material, have a very important role in the steadiness and endurance of the product. In this case Interhol manholes are extraordinary product that has very high quality that enable long lifetime.

MAINTANANCE AND SECURITY
The white color of the interior of these manholes not only eases the process of inspection and controlling, but also gives a high level of security and safety of the workers. This high level of security can be achieved with the utilization of the scales that have specific design and enable easy entering and going down to the bottom of the manhole. The scales are part of every element of the manhole.

CHEMICAL RESISTANCE
The characteristic of resistance of the PE and PP to the chemical aggression is already known. The characteristics of these manholes are defined in the EN 13598-1/2 standard, in which is confirmed that the manholes made of PE and PP are water resistant in a wide spectrum of PE values, as some domestic and other wastewaters, rainwater, surface and underground water. The list that contains the values about the chemical resistance can be delivered upon the request of the customers.

RESISTANCE TO MECHANICAL STROKES
PE and PP are a very elastic and easily adjustable materials that does not break and that is the reason why the Interhol manholes are resistant to falls and impacts that can occur during the assembly.

FAST PRODUCTION
The Interhol manholes are delivered right away, as a full compact package or with the elements and the rubber that is used for their assembly. They can also be delivered with welded pipe connectors or with separate connectors that can be mounted on field with rubber.

SMALL WEIGHT
Compared to the concrete manholes that have huge weights, making it easier to transport and to manipulate on field and during the assembly.

PURPOSE

Due to the characteristics INTERHOL manhole have versatile purpose :

- SANITARY – SEWER SYSTEMS
- LANDFILLS
- CHEMICAL PLANTS
- SEWAGE SYSTEMS
- WATER METER SYSTEM

ELEMENTS OF THE INTERHOLE MANHOLE

Standards

- EN 13598 -1 Plastic pressurless pipe system, underground drainage and sewer. PVC-U, PP and PE.Specifications for manholes of accessories including shallow inspection chambers.
- EN 13598 -2 1 Plastic pressurless pipe system, underground drainage and sewer. PVC-U, PP and PE. Specifications for manholes and inspection chambers in a traffic environment and deep underground installations.
- EN 476 Common requests for components used in drainage and sewer.
- EN 14982 Determination of the class of stiffness.
- EN 14802 Determinations of the resistance in case of traffic or other external burdens.
- DIN 4124 Excavation, trenches , width of working space, leverage
- EN 1610 Construction and testing of drainage and sewer

COVER

The Interhol cover is produced in the following dimensions: ID800 and ID1000 and it is available in 4 types due to satisfying of the real needs such as:

1.Low Cover (CAP LF/1)
2.Low Cover with extension (CAP LF/2)
3.High Cover (CAP DM/1)
4.High Cover with extension (CAP DM/2)

1 2 3 4

On the covers when moving vertically downward are positioned ribs for enhancing that make this element resistant to direct burdens and very durable. The complete durability of these elements is also supported by their very thick walls. The elements have an hole for lifting and easier handling and assembling . The white color inside the covers guarantees the security while entering the manhole and this safety is also increased with the scale that is designed on the element and it is a part from the other elements of the Interhol manholes. If you need to shorten the height, the manhole cone has produced lines of which can be cut the height. If you needed to add some height, the cone can be upgraded with additional ring – extension.

Aiming to achieve the necessary heights we are offering an additional extension for the covers (CAP EX 600), in case our clients need it during field work. It is designed to be situated on the top of the cover with the goal to satisfy the necessary height. This element is suitable for every cover from the Interhol manholes: ID800 and ID1000.

EXTENSIONS

Due to the different heights of the manholes and wanting to satisfy every height, Interhol manholes are equipped with 5 different extensions that can be easily joined in order to achieve the wanted height.

1.Extension 250mm (EX.250)
2.Extension 500mm (EX.500)
3.Extension 750mm (EX.750)
4.Extension 1000mm (EX.1000)
5.Cascade extension 500mm (KAS-EX.500)

1 2 3 4 5

Cascade extension is specially designed for making cascade manhole, to allow connection of the input pipes of the required height.

The supreme strength and the long lifetime of our product is not guaranteed only with the high quality material, but also with the extraordinary design with particular attention given to the horizontal and vertical ribs that make the product statically enduring.

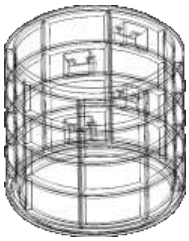

Other very important segment for these elements is the scales that are compactly casted during the production of the element itself. The design of these scales gives the workers big security while entering the manhole and makes it easy for maintaining.
We also have to give importance to the white color that can be found inside the manhole which gives additional security.

BASIS

As a basis for the Interhol Manholes are used 3 different forms of basis that are made that way because of the technical requirements in the process of assembling.

1. Straight base (input/output under 180°) - **BS**
2. 45 degree base (3 inputs/1output under 45°) - **BS 2x45°**
3. 90 degree base (3 inputs/1outputs under 90°) - **BS TEE**

These bases are produced with dimensions from ID 400, ID600, ID800 and ID1000.
The wastewaters do not remain on the bottom of the basis, and that minimizes the existence of unpleasant gases.

MULTI USE MANHOLES

- **Telescopic manhole**
- **Cable manhole**

The intend of the both types is to archive high performance in plumbing, electrical and telecommunications systems. Advantages of the manholes are: easy access, quick installation, easy adjustable height, input from all sides, protection from freezing.

TELESCOPIC MANHOLE

Telescopic base

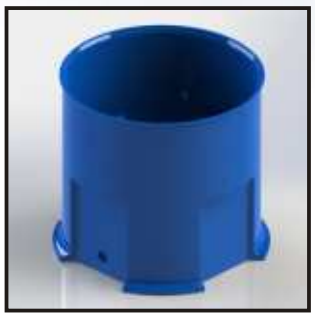

Telescopic extension – round

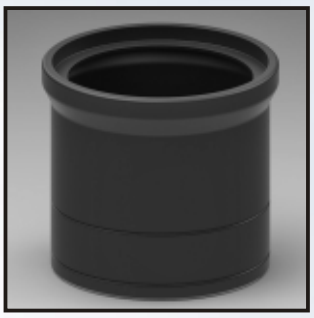

Telescopic extension - square

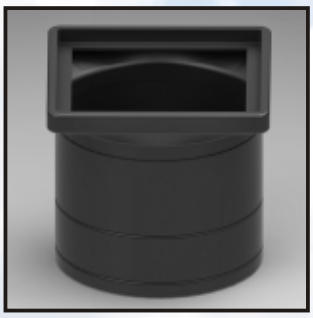

Telescopic extension can be used to extend the telescopic base and all Interhol covers.

CABLE MANHOLE

Cable manholes is made of PE and PP and is used for access to the required installation of cable routes, lines, revision or fixing.
They are easily accessible due to technical solutions and have high load capacity.

GULLY

The road gully serves to collect storm water and has a excellent hydraulic features that provide fast and simple installation, easy cleaning and inspection.
The gully has monolithic structure, composed with syphon part protecting leaves flow in to the pipe system and ends with square. It is suitable for connection of all standard sewer pipes.

ASSEMBLY OF THE INTERHOL MANHOLE

Depending from the clients requests the manhole is delivered on field fully welded or in elements that are assembled with rubber.

First way to obtain a compact manhole is to produce it as a monolithic, the wanted height in one compact part.
With maximum height up to 2350 mm.

The second way is with welding of the elements with extruder during which is used a polyethylene wire. The heating of the polyethylene surface of the elements of the manhole and the melted polyethylene wire from the extruder are joined and they form a whole that is 100% waterproof.

The third way to obtain consistency is to assemble specially designed rubber between the joining of every element. This rubber gives full stability to the elements and waterproofness.

CONNECTION OF ADDITIONAL CONNECTORS WITH THE INTERHOL MANHOLE

As additional input and output connectors for interhol manhole are used:

1. Connection from pressured pipe and corrugated pipe.
On the already marked bases or cascaded if is necessary are made some apertures and this connectors is welded to the manhole with extruder by using a polyethylene wireand that way gets formed 100% waterproof layer.

2. SOCKET

On the base directly can be welded PP or PE socket according to the required dimensions.
These connectors allow easy and quick connection of manhole to drain line. It is important, the pipe which is associated with this connection to be clean and covered with grease Lubricant Neutrex or something like that.

Because Interhol manholes have a standard dimensions of the market apertures, they can be connected with other types of materials other than polyethylene pipes.

Types of materials of pipes that can be connected to interhol manhole are:

1) Polyethylene
2) Cast iron
3) Polypropylene
4) Clay
5) GRP (FIBERGLASS)
6) PVC
7) Corrugated pipes

3. Rubber

There is a specially designed waterproof rubber for dimension of apertures OD 110, OD 160, OD 200, OD 250 and OD 315. Aperture of the base is made with special knife for each dimension, for correctly placement to the aperture, that is 100% waterproof. The rubber is situated on the already made aperture of the basis, and before you put it pipe in it, the rubber must be covered with grease Lubricant Neutrex or something like that.

INSTALATION OF THE INTERHOL MANHOLE

MANHOLE SETTINGS

PE and PP manholes must be set on sandy surface which should be a hard, and to used material that fits on lateral charging or fillings (compression). The dimensions of the separated material should be from 0 to 32 cm, and dimensions of the crushed material should be from 0 to 16 cm.
The surface should be made in layers of 15 to 20 cm and filled (compressed) to 97% by Procter. In case of presence of groundwater, the surface should be 30 cm made of concrete MB 15. Due to low weight the manual installation is possible, in case of machine handling tying the ropes and ribbons is allowed only around the button, bases manhole or to apertures intended for it.

MANHOLE FILLINGS

You have to use same material as for the foundation. Fill the manhole correctly , grained material has to compressed by layers of 30 cm max, up to 97% of Procter, at least 50 cm wide from manhole.
Filling around and under the manhole is important to prevent possible deformation and leaning.

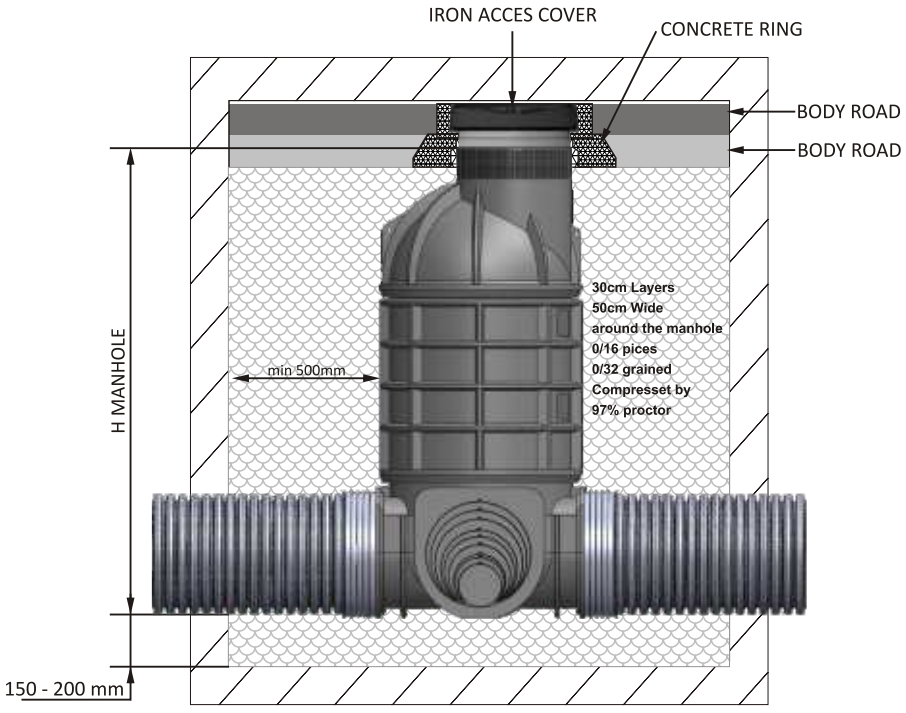

MANHOLE HEIGHT

SET UP OF CONCRETE RING

In case of heavy traffic, it is necessary to put a concrete ring on the cone. This concrete ring must not be in touch with the cone of the manhole. The empty space above the cone and the concrete ring should be 40mm, and between the cone and the ring a rubber is set up.
The cone should penetrate in the concrete ring 50mm.

In this way the static and dynamic burdening will not be transferred on the body of the manhole but on the pressed sand and the base around the manhole.
The concrete ring is not necessary in case of installation where there is no traffic and can be used a direct polyethylene / polypropylene cover or metal cover B 125.

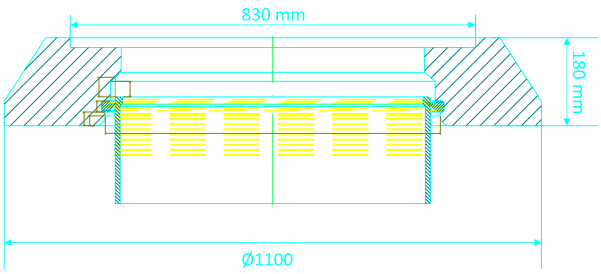

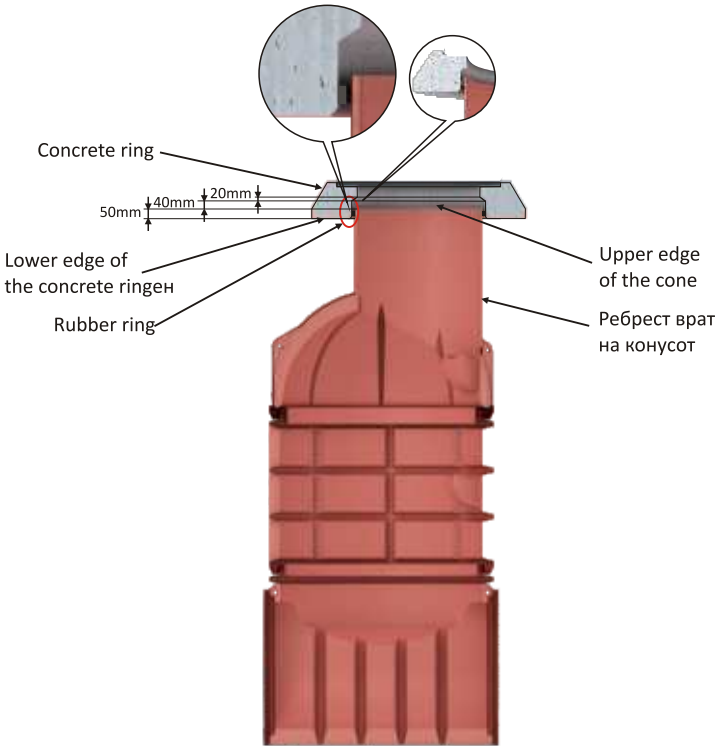

STORAGE AND TRANSPORT INSTRUCTIONS

1. During storage and transport of manhole components storing over sharp and spiny objects is not allowed therefore avoiding point overloading.
2. While unloading manholes from trucks to the forklifts should be used assisted by straps, without throwing it from height.
3. While moving, pulling over sharp edges or sharp objects be avoided.
4. Storage height depends of the geometry of the components, but heights above 2.5 m are not recommended.
5. The products can be stored outdoors because they have UV protection. If storage period is longer than 2 years, protection from direct sunlight is needed.
6. Freezing is not an issue for components of Interhol manholes because PE and PP are stable until - 35°C. Although elasticity of rubber sealing rings might be reduced, which might cause installation difficulties.
7. Products should be kept out of contact with organic solvents and direct flame exposure.
8. Module components are delivered together.
9. Every components of the manhole has its ID number.

TECHNICAL CHARACTERISTICS

INTERHOL MANHOLE

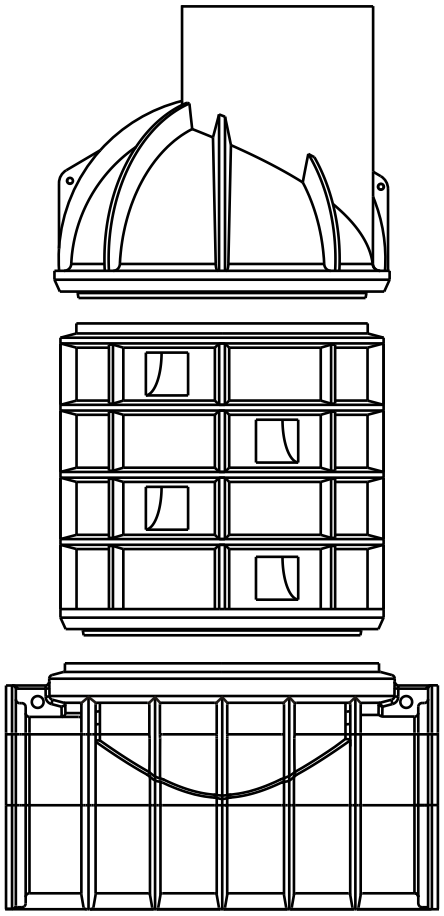

ROAD GULLY OD 500

Element	OD	H	h	h1	Input / Output
Road Gully	500	900	550	370	OD 160

dimensions (mm)

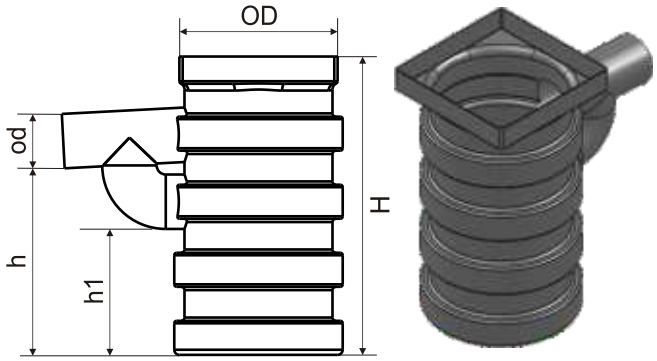

TELESCOPIC MANHOLE OD 600

Element	OD	H	h	h1
Telescopic manhole	610	1100	600	500

dimensions (mm)

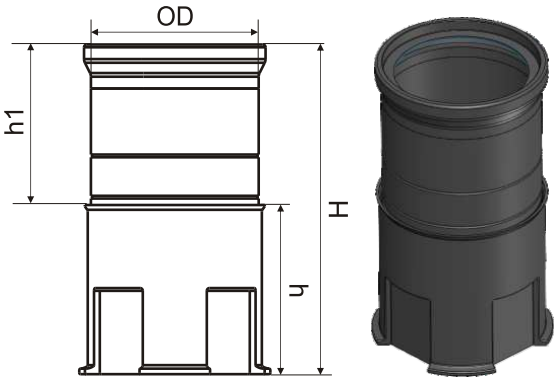

TELESCOPIC BASE OD 600

Element	OD	H	id 1	id 2
Telescopic base	630	600	250	35

dimensions (mm)

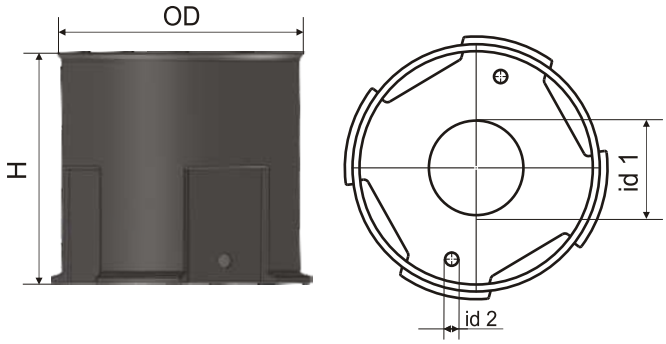

TELE. EXTENSION ROUND OD 600

Element	OD	H	L1	L2	id 1	id 2
Telescopic extension round	610	600	510	660	250	35

dimensions (mm)

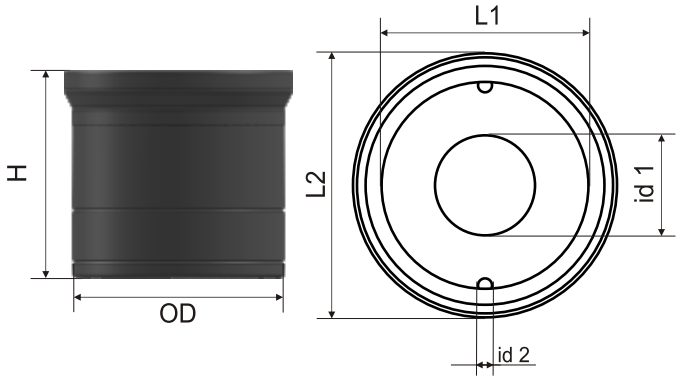

TELE. EXTENSION SQUARE OD 600

Element	OD	H	L1	L2	id 1	id 2
Telescopic extension square	610	600	500	650	250	35

dimensions (mm)

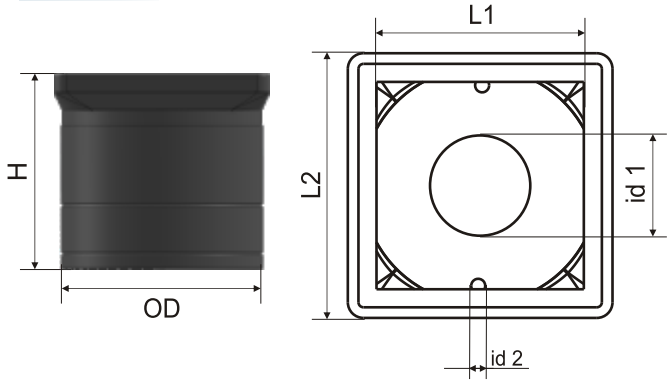

BASE OD 400

Element	OD	H	H1	L
BS 400.200	400	415	155	580
	Output 1 / Input 1			
	DN 200			

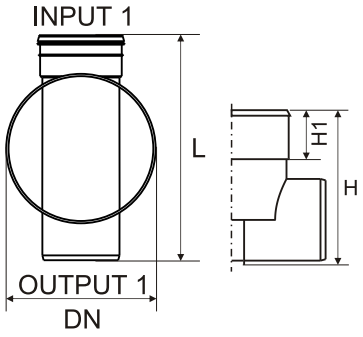

BASE OD 400

Element	OD	H	H1	L
BS 2x45°400.200	400	415	155	580
	Output 1 / Input 1		Input 2 и 3	
	DN 200		DN 160	

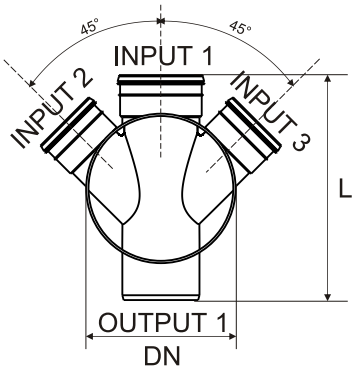

BASE OD 400

Element	OD	H	H1	L
BS 400.200 1x45° R	400	415	155	580
	Output 1 / Input 1		Input 2	
	DN 200		DN 160	

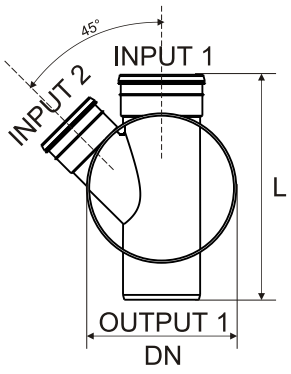

BASE OD 400

Element	OD	H	H1	L
BS 400.200 1x45° L	400	415	155	580
	Output 1 / Input 1		Input 2	
	DN 200		DN 160	

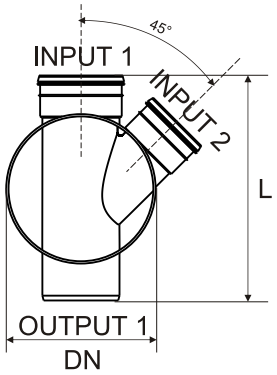

BASE ID 600

Element	H	H1	L	ID	h	Input 1, 2 и 3 / Output
BS 2x45°600.300	450	50	900	600	40	OD 300

dimensions (mm)

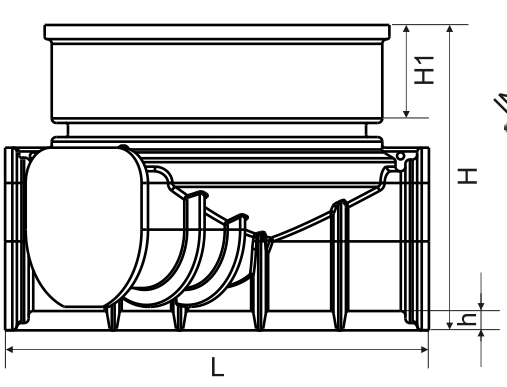

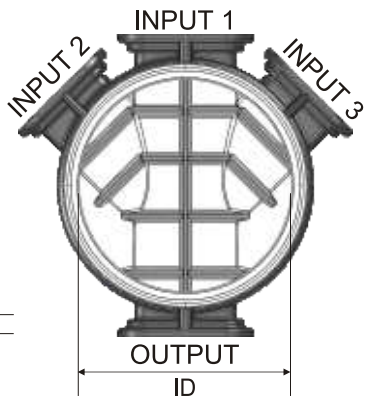

PE AND PP COVER

Element	Diametar (mm)	
Cover	Ø400	Ø600

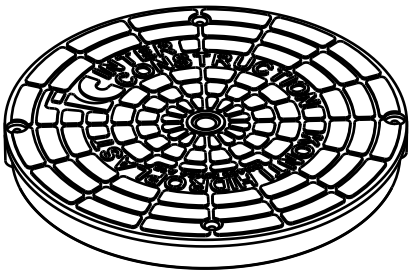

COVER ID 800

Element		H	H1	ID	OD
1	CAP LF 800/1	430	180	800	645
2	CAP DM 800/1	715	240	800	645
	CAP DM 800/2	960	480	800	645

dimensions (mm)

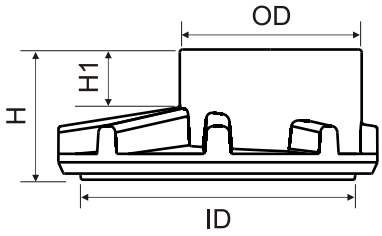

1 CAP LF 800

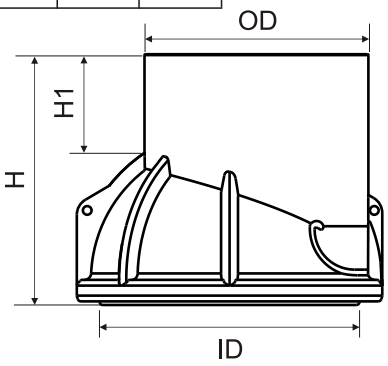

2 CAP DM 800

EXTENSION COVER

Element	H	H1	id
CAP EX 600	600	100	645

dimensions (mm)

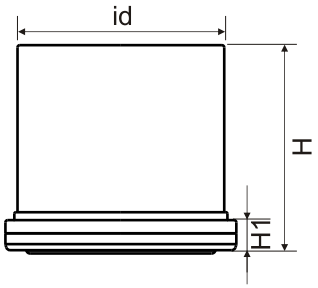

CAP EX 600

EXTENSION ID 800

Element		H	ID
1	EX 250.800	250	800
2	EX 500.800	545	800
3	EX 750.800	780	800
4	EX 1000.800	1000	800

dimensions (mm)

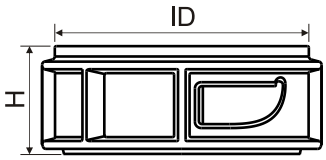

1 EX.250.800

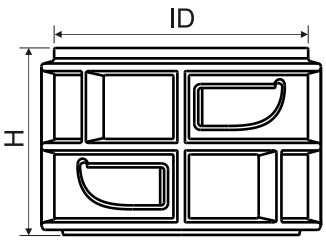

2 EX.500.800

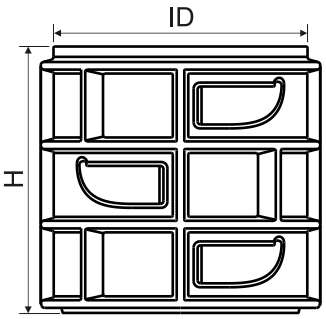

3 EX.750.800

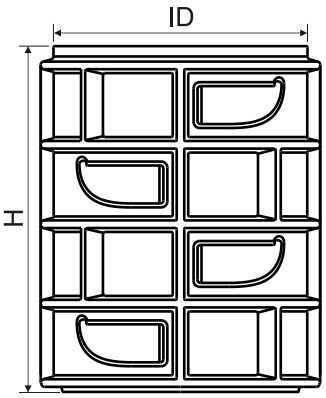

4 EX.1000.800

BASE ID 800

Element	H	L	ID	h	Input / Output
BS 800.400	650	1100	800	70	OD/ID 110 - 400

dimensions (mm)

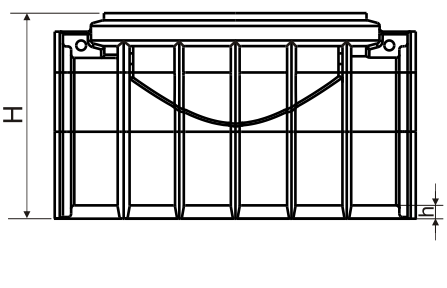

BASE ID 800

Element	H	L	ID	Input / Output
BS TEE 800.500	650	950	800	OD/ID 110 - 500

dimensions (mm)

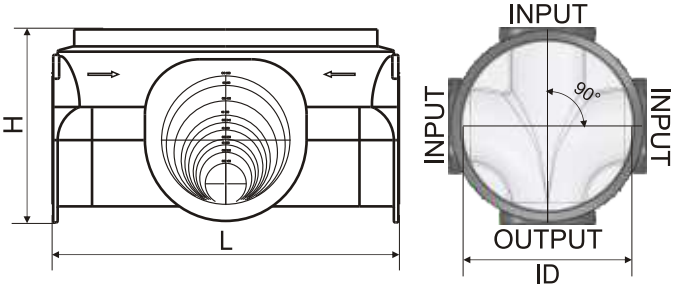

COVER ID 1000

	Element	H	H1	ID	OD
1	CAP LF 1000/1	430	180	1000	645
	CAP LF 1000/2	680	425	1000	645
2	CAP DM 1000/1	830	180	1000	645
	CAP DM 1000/2	1080	425	1000	645
	CAP DM 1000/3	1330	675	1000	645

dimensions (mm)

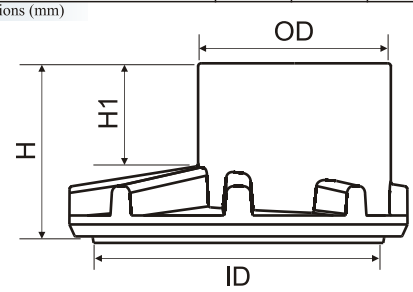

1 CAP LF 1000

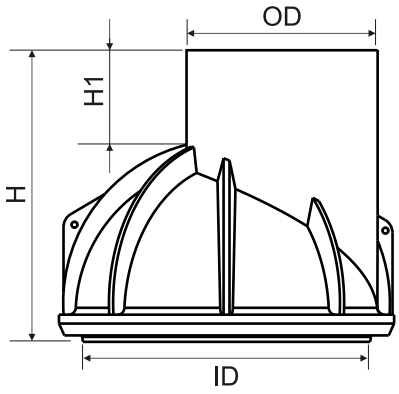

2 CAP DM 1000

CASCADE EXTENSION ID 1000

Element	H	ID	Влез
KAS EX 500.1000	535	1000	OD/ID 110 - OD 400

dimensions (mm)

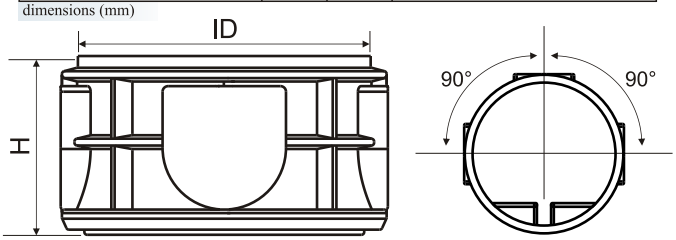

TANGENT CONE OD 1000

Element	OD 1	OD 2	h1	h2
Тангентен конус	1000	160	200	270

dimensions (mm)

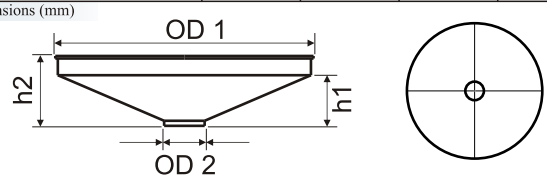

EXTENSION ID 1000

	Element	H	ID
1	EX 250.1000	310	1000
2	EX 500.1000	535	1000
3	EX 750.1000	770	1000
4	EX 1000.1000	1020	1000

dimensions (mm)

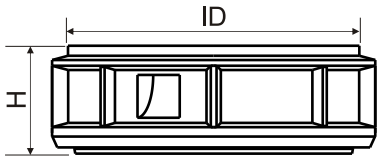

1 EX 250.1000

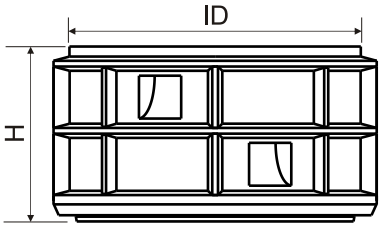

2 EX 500.1000

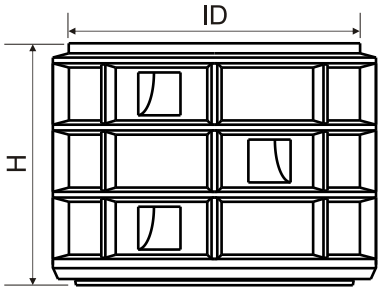

3 EX 750.1000

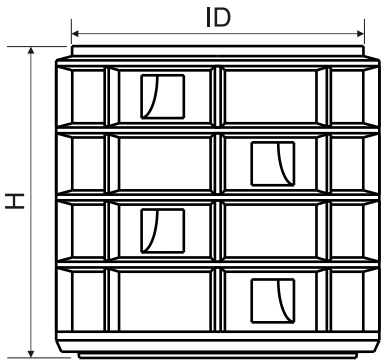

4 EX 1000.1000

BASE ID 1000

Element	H	L	ID	h	Input / Output
BS 1000.400	530	1250	1000	40	OD/ID 110 - 400
BS 1000.600	870	1180	1000	90	OD/ID 110 - 600

dimensions (mm)

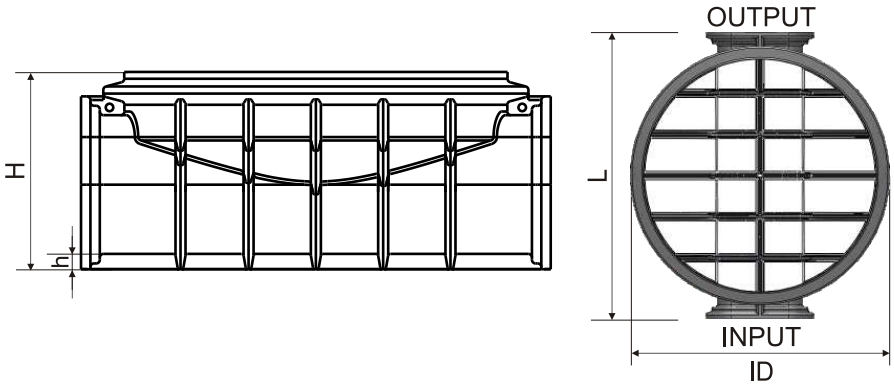

BASE ID 1000

Element	H	L	ID	h	Input / Output
BS 1000.800	1200	1230	1000	120	OD/ID 800

dimensions (mm)

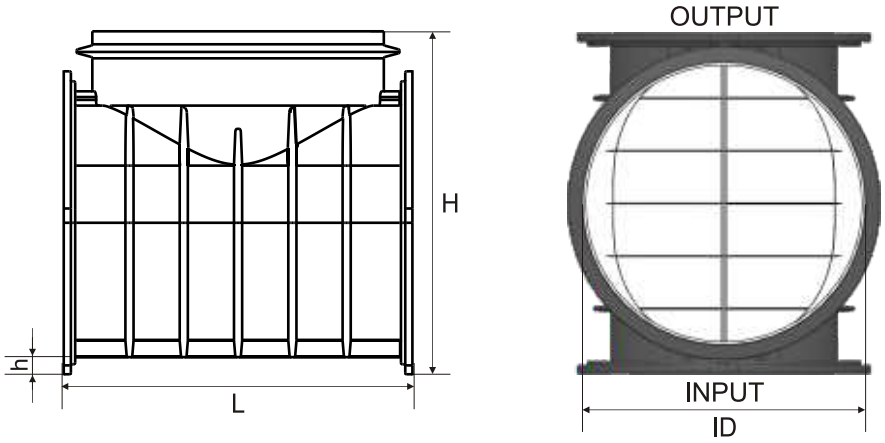

BASE ID 1000

Element	H	L	ID	h	Input / Output
BS 1000.1000	1400	1250	1000	120	OD/ID 1000

dimensions (mm)

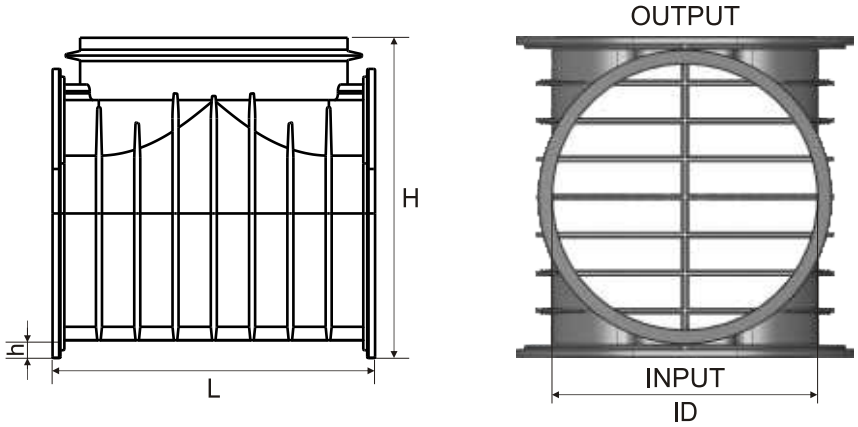

BASE ID 1000

Element	H	L	A	ID	h
BS 2x45° 1000.600	870	1300	1750	1000	90

dimensions (mm)

Input 2-3	Input 1	Output
OD/ID 110 - OD500	OD/ID 110 - 600	OD/ID 110 - 600

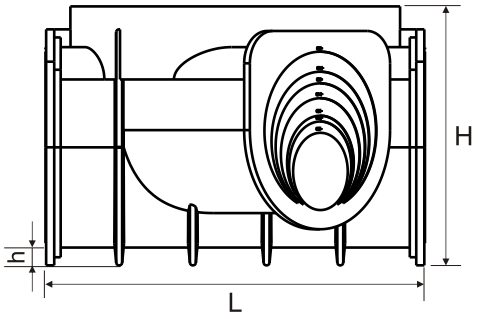

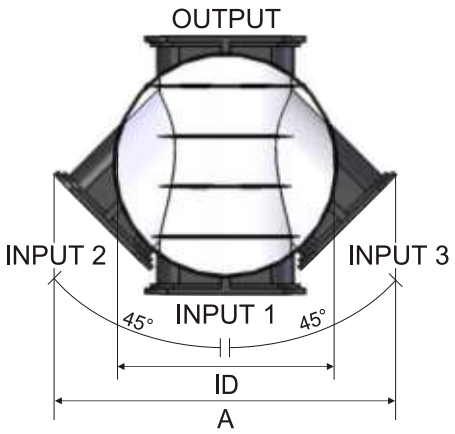

BASE ID 1000

Element	H	L	ID	h	Input / Output
BS TEE 1000.600	870	1300	1000	90	OD/ID 110 - 600

dimensions (mm)

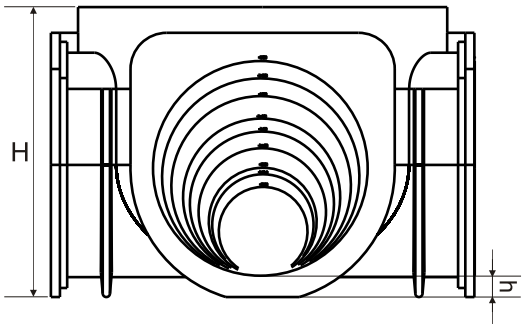

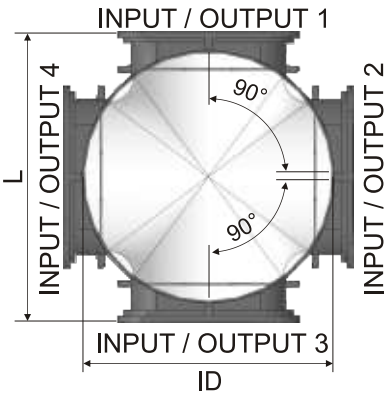

CABLE MANHOLE

Element	H1	H2	L1	L2	L3	L4	L5	L6
Cable manhole	800	120	1410	100	550	550	640	1240

dimensions (mm)

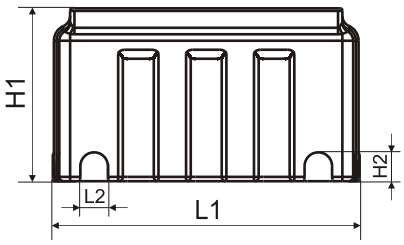

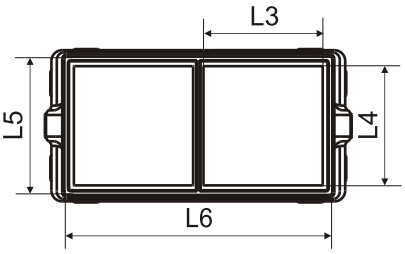

RUBBER

OD / ID	Diametar of knife (mm)
OD 110	114
ID 110	125
OD 160	166
ID 160	193
OD 200	208
ID 200	240
OD 250	262
ID 250	295
OD 315	337
ID 300	355

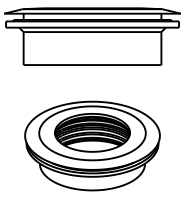

BARRIERES

In order to divert traffic and also to ensure its security, to protect pedestrians, railing objects under construction, redirect traffics, reservation of parking spaces and bus facilities enable our travel barriers meeting the above objectives.
Made from high quality UV stable polyethylene, resistant to shock and solar influences. This polymer retains its color for many years exposed to outside influences solar.

The barriers is designed with a cap on the top and at the bottom for filling and discharge of water of them. It is not necessary to put inside water for level more than 20cm.
Easy handled while full with forklift and storage while empty.
The design allows the barrier marking the reflexes.
The basic colors available are red and white and there is opportunity for production in other colors depending on your needs.

BARRIERES 1500

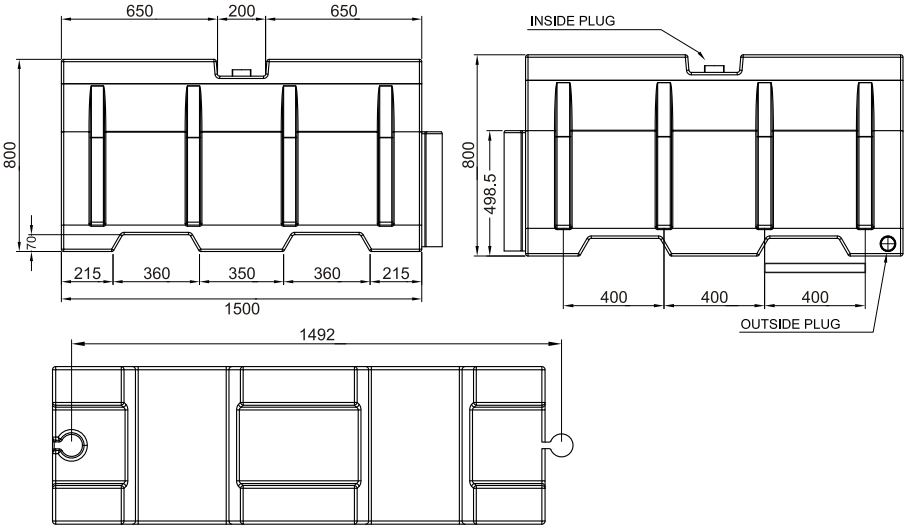

БАРИЕРА 2000

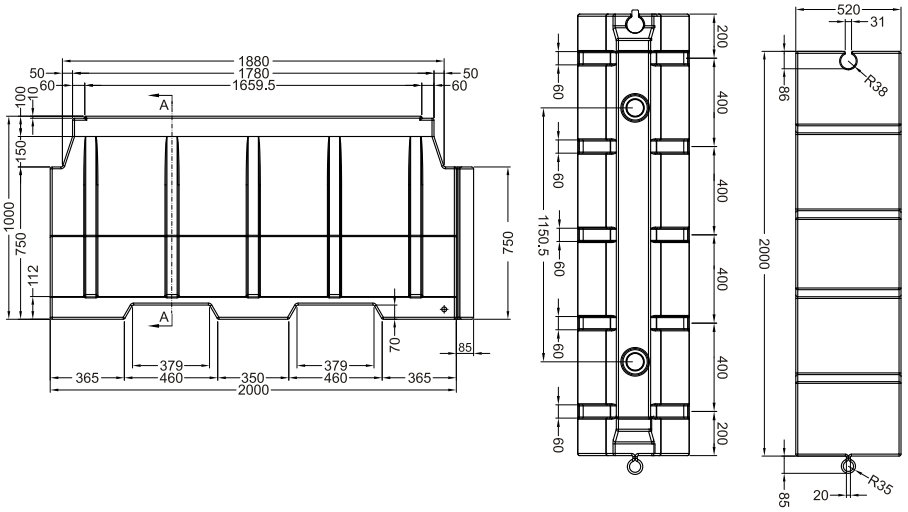

TANKS

The polyethylene reservoirs are available in three sizes from 1000l, 500l and 300l.
They are produced in white, black and blue color, but depending from the needs they can be produced in other colors as well.
These reservoirs are used for the storage of water, alimentary products, derivates and some similar products. The reservoirs have wide temperature range from around -30°C to +70°C.

- Material approved for alimentary products
- Wide temperature range
- Good chemical resistance and resistance to corrosion
- Having passed the waterproof tests, our products guarantee long lifetime and quality
- The reservoirs are producing from material which can be recycled

CERTIFICATE

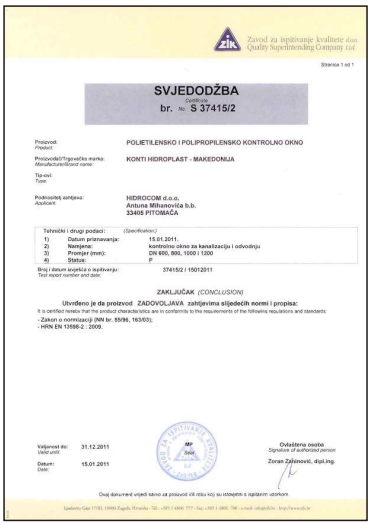

KONTI HIDROPLAST®

INTER CONSTRUCTION

MACEDONIA
1480 Gevgelija, Industriska bb
Office - Tirana AlbaniaBul. Zogu I, Pallati 9,
kati 2 nr.4

+355 67 20 22 043 +355 67 20 21 043
+389 75 221 043

info@kontihidroplast-al.com
rami.j@kontihidroplast-al.com

www.kontihidroplast-al.com

Design: Print Chaos | march 2012